XVR
Резбово съединение с холендър

HANSA-FLEX

Свойства

Съединение 1	външна резба BSP цилиндрична
Форма на уплътнение 1	форма B
Съединение 2	метрична външна резба цилиндрична
Форма на уплътнение 2	24° вътрешен конус
Конструкция	резбово съединение с холендър
Модификация	права
Стандарт	DIN 2353 ISO 8434-1
Обем на доставката	щуцер (без холендрова гайка и режещ пръстен)
Материал	стомана
Повърхностно защитно покритие	с галванично покритие



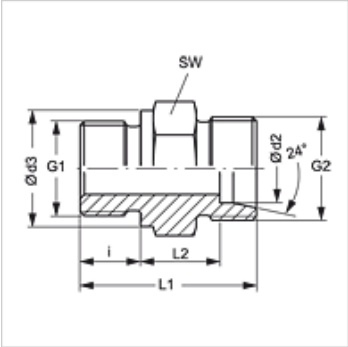

Указание

Указания за монтаж, сглобяване, натоварване на налягане и допустими работни температури можете да видите от техническата информация за резбови тръбни съединения.

Артикул

Обозначение	Конструктивна поредица	Работно налягане bar	Ø d2 (mm)	G1	G2	Ø d3 (mm)	i (mm)	L1 (mm)	L2 (mm)	SW (mm)
XVR NW 04 HL	L	PN 315	6	G 1/8" -28	M 12 x 1,5	14	8	23,5	8,5	14
XVR NW 04 HL 1/4	L	PN 315	6	G 1/4" -19	M 12 x 1,5	18	12	29,0	10,0	19
XVR NW 04 HL 3/8	L	PN 315	6	G 3/8" -19	M 12 x 1,5	22	12	30,5	11,5	22
XVR NW 04 HL 1/2	L	PN 315	6	G 1/2" -14	M 12 x 1,5	26	14	33,0	12,0	27
XVR NW 06 HL 1/8	L	PN 315	8	G 1/8" -28	M 14 x 1,5	14	8	24,0	9,0	14
XVR NW 06 HL	L	PN 315	8	G 1/4" -19	M 14 x 1,5	18	12	29,0	10,0	19
XVR NW 06 HL 3/8	L	PN 315	8	G 3/8" -19	M 14 x 1,5	22	12	30,5	11,5	22
XVR NW 06 HL 1/2	L	PN 315	8	G 1/2" -14	M 14 x 1,5	26	14	33,0	12,0	27
XVR NW 08 HL 1/8	L	PN 315	10	G 1/8" -28	M 16 x 1,5	14	8	25,5	10,5	17
XVR NW 08 HL	L	PN 315	10	G 1/4" -19	M 16 x 1,5	18	12	30,0	11,0	19
XVR NW 08 HL 3/8	L	PN 315	10	G 3/8" -19	M 16 x 1,5	22	12	31,5	12,5	22
XVR NW 08 HL 1/2	L	PN 315	10	G 1/2" -14	M 16 x 1,5	26	14	34,0	13,0	27
XVR NW 10 HL 1/8	L	PN 315	12	G 1/8" -28	M 18 x 1,5	14	8	26,5	11,5	19
XVR NW 10 HL 1/4	L	PN 315	12	G 1/4" -19	M 18 x 1,5	18	12	31,0	12,0	19
XVR NW 10 HL	L	PN 315	12	G 3/8" -19	M 18 x 1,5	22	12	31,5	12,5	22
XVR NW 10 HL 1/2	L	PN 315	12	G 1/2" -14	M 18 x 1,5	26	14	34,0	13,0	27
XVR NW 10 HL 3/4	L	PN 315	12	G 3/4" -14	M 18 x 1,5	32	16	37,0	14,0	32
XVR NW 13 HL 1/4	L	PN 315	15	G 1/4" -19	M 22 x 1,5	18	12	32,0	13,0	24
XVR NW 13 HL 3/8	L	PN 250	15	G 3/8" -19	M 22 x 1,5	22	12	33,0	14,0	24
XVR NW 13 HL	L	PN 250	15	G 1/2" -14	M 22 x 1,5	26	14	35,0	14,0	27
XVR NW 13 HL 3/4	L	PN 250	15	G 3/4" -14	M 22 x 1,5	32	16	38,0	15,0	32
XVR NW 13 HL 1	L	PN 250	15	G 1" -11	M 22 x 1,5	39	18	42,5	17,5	41
XVR NW 16 HL 3/8	L	PN 250	18	G 3/8" -19	M 26 x 1,5	22	12	33,5	14,0	27
XVR NW 16 HL	L	PN 250	18	G 1/2" -14	M 26 x 1,5	26	14	36,0	14,5	27
XVR NW 16 HL 3/4	L	PN 250	18	G 3/4" -14	M 26 x 1,5	32	16	38,0	14,5	32
XVR NW 16 HL 1	L	PN 250	18	G 1" -11	M 26 x 1,5	39	18	40,5	15,0	41
XVR NW 20 HL 1/2	L	PN 160	22	G 1/2" -14	M 30 x 2	26	14	38,0	16,5	32
XVR NW 20 HL	L	PN 160	22	G 3/4" -14	M 30 x 2	32	16	40,0	16,5	32
XVR NW 20 HL 1	L	PN 160	22	G 1" -11	M 30 x 2	39	18	43,0	17,5	41
XVR NW 25 HL 1/2	L	PN 160	28	G 1/2" -14	M 36 x 2	26	14	40,0	18,5	41
XVR NW 25 HL 3/4	L	PN 160	28	G 3/4" -14	M 36 x 2	32	16	41,0	17,5	41
XVR NW 25 HL	L	PN 160	28	G 1" -11	M 36 x 2	39	18	43,0	17,5	41
XVR NW 25 HL 1 1/4	L	PN 160	28	G 1,1/4" -11	M 36 x 2	49	20	46,0	18,3	50
XVR NW 32 HL 3/4	L	PN 160	35	G 3/4" -14	M 45 x 2	32	16	45,0	18,5	46
XVR NW 32 HL 1	L	PN 160	35	G 1" -11	M 45 x 2	39	18	47,0	18,5	46
XVR NW 32 HL	L	PN 160	35	G 1,1/4" -11	M 45 x 2	49	20	48,0	17,5	50
XVR NW 32 HL 1 1/2	L	PN 160	35	G 1,1/2" -11	M 45 x 2	55	22	51,0	18,5	55
XVR NW 40 HL 1 1/4	L	PN 160	42	G 1,1/4" -11	M 52 x 2	49	20	50,0	19,0	55
XVR NW 40 HL	L	PN 160	42	G 1,1/2" -11	M 52 x 2	55	22	52,0	19,0	55

Въпреки най-старателната проверка не са изключени грешки и ние не поемаме гаранция за съдържащите се данни.

XVR
Резбово съединение с холендър

HANSA-FLEX

Артикул

Обозначение	Конструктивна поредица	Работно налягане bar	Ø d2 (mm)	G1	G2	Ø d3 (mm)	i (mm)	L1 (mm)	L2 (mm)	SW (mm)
XVR NW 03 HS 1/8	S	PN 400	6	G 1/8" -28	M 14 x 1,5	14	8	27,5	12,5	14
XVR NW 03 HS	S	PN 400	6	G 1/4" -19	M 14 x 1,5	18	12	32,0	13,0	19
XVR NW 03 HS 3/8	S	PN 400	6	G 3/8" -19	M 14 x 1,5	22	12	32,5	13,5	22
XVR NW 03 HS 1/2	S	PN 400	6	G 1/2" -14	M 14 x 1,5	26	14	35,0	14,0	27
XVR NW 04 HS	S	PN 400	8	G 1/4" -19	M 16 x 1,5	18	12	34,0	15,0	19
XVR NW 04 HS 3/8	S	PN 400	8	G 3/8" -19	M 16 x 1,5	22	12	34,5	15,5	22
XVR NW 04 HS 1/2	S	PN 400	8	G 1/2" -14	M 16 x 1,5	26	14	37,0	16,0	27
XVR NW 06 HS 1/4	S	PN 400	10	G 1/4" -19	M 18 x 1,5	18	12	34,0	14,5	19
XVR NW 06 HS	S	PN 400	10	G 3/8" -19	M 18 x 1,5	22	12	34,5	15,0	22
XVR NW 06 HS 1/2	S	PN 400	10	G 1/2" -14	M 18 x 1,5	26	14	39,0	17,5	27
XVR NW 08 HS 1/4	S	PN 400	12	G 1/4" -19	M 20 x 1,5	18	12	36,0	16,5	22
XVR NW 08 HS	S	PN 400	12	G 3/8" -19	M 20 x 1,5	22	12	36,5	17,0	22
XVR NW 08 HS 1/2	S	PN 400	12	G 1/2" -14	M 20 x 1,5	26	14	39,0	17,5	27
XVR NW 08 HS 3/4	S	PN 400	12	G 3/4" -14	M 20 x 1,5	32	16	41,0	17,5	32
XVR NW 10 HS 3/8	S	PN 400	14	G 3/8" -19	M 22 x 1,5	22	12	38,5	18,5	27
XVR NW 10 HS	S	PN 400	14	G 1/2" -14	M 22 x 1,5	27	14	41,0	19,0	27
XVR NW 10 HS 3/4	S	PN 400	14	G 3/4" -14	M 22 x 1,5	32	16	43,0	19,0	32
XVR NW 13 HS 1/4	S	PN 400	16	G 1/4" -19	M 24 x 1,5	22	12	38,0	18,5	27
XVR NW 13 HS 3/8	S	PN 400	16	G 3/8" -19	M 24 x 1,5	22	12	39,0	18,5	27
XVR NW 13 HS	S	PN 400	16	G 1/2" -14	M 24 x 1,5	26	14	41,0	18,5	27
XVR NW 13 HS 3/4	S	PN 400	16	G 3/4" -14	M 24 x 1,5	32	16	45,0	20,5	32
XVR NW 16 HS 1/2	S	PN 400	20	G 1/2" -14	M 30 x 2	26	14	45,0	20,5	32
XVR NW 16 HS	S	PN 400	20	G 3/4" -14	M 30 x 2	39	18	47,0	20,5	32
XVR NW 16 HS 1	S	PN 250	20	G 1" -11	M 30 x 2	39	18	50,0	21,5	41
XVR NW 20 HS 1/2	S	PN 250	25	G 1/2" -14	M 36 x 2	26	14	49,0	23,0	41
XVR NW 20 HS 3/4	S	PN 250	25	G 3/4" -14	M 36 x 2	32	16	51,0	23,5	41
XVR NW 20 HS	S	PN 250	25	G 1" -11	M 36 x 2	39	18	53,0	23,0	41
XVR NW 20 HS 1 1/4	S	PN 160	25	G 1,1/4" -11	M 36 x 2	49	20	56,0	24,0	50
XVR NW 25 HS 3/4	S	PN 160	30	G 3/4" -14	M 42 x 2	32	16	53,0	23,5	46
XVR NW 25 HS 1	S	PN 160	30	G 1" -11	M 42 x 2	39	18	55,0	23,5	46
XVR NW 25 HS	S	PN 160	30	G 1,1/4" -11	M 42 x 2	49	20	57,0	23,5	50
XVR NW 25 HS 1 1/2	S	PN 160	30	G 1,1/2" -11	M 42 x 2	55	22	50,0	23,5	55
XVR NW 32 HS 1	S	PN 160	38	G 1" -11	M 52 x 2	39	18	60,0	26,0	55
XVR NW 32 HS 1 1/4	S	PN 160	38	G 1,1/4" -11	M 52 x 2	49	20	62,0	26,0	55
XVR NW 32 HS	S	PN 160	38	G 1,1/2" -11	M 52 x 2	55	22	64,0	26,0	55

конструктивна поредица: LL = много лек L = лек S = тежък – PN = номинално налягане PB = макс. работно налягане – Ø d2 = външен диаметър на тръбата

Варианти на продукта

XVR VA	Резбово съединение с холендър, благородна стомана
VR	Резбово съединение с холендър, стомана