K-HAND-SCHIEBEVENTIL

Manual slide valves

HANSA-FLEX

Свойства

Работно налягане	макс. 10 bar
работна температура	max. +70 °C



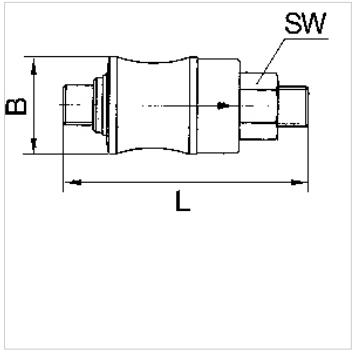

Указание

Други данни при запитване.

Описание

For use on devices that have to be vented whenever they are turned off, either because of safety regulations or for technical reasons. The pneumatic devices are disconnected from the system and simultaneously vented each time they are shut off.

Артикул

Обозначение	Резба	B (mm)	L (mm)	SW (mm)
K- 07 30 15 92	G 1/8	21,0	67,0	14
K- 07 30 15 93	G 1/4	24,0	77,0	17
K- 07 30 15 94	G 3/8	31,0	87,0	22
K- 07 30 15 95	G 1/2	35,0	104,0	26

Въпреки най-старателната проверка не са изключени грешки и ние не поемаме гаранция за съдържащите се данни.