K-BKR EINTEILIG VA

Ball valves

Свойства

Работно налягане	max. 55 bar (depending on connection size and temperature)
работна температура	Max. 150 °C
уплътнение	PTFE
ръчен лост	Stainless steel 1.4301

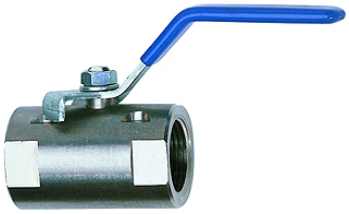

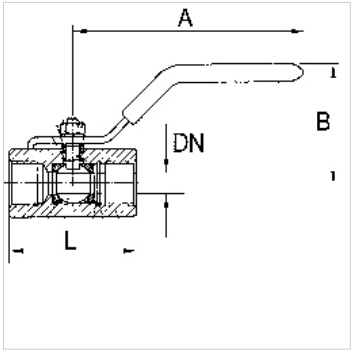

Указание

G thread acc. to DIN EN ISO 228-1, with ISO flange plate (acc. to ISO 5211)
Други данни при запитване.

Описание

Full bore with G 1/4 to G 3/8, reduced bore with G 1/2 to G 2

Указания за поръчка

For use on devices that have to be vented whenever they are turned off, either because of safety regulations or for technical reasons. The pneumatic devices are disconnected from the system and simultaneously vented each time they are shut off.

Артикул

Обозначение	DN	Резба	A (mm)	B (mm)	L (mm)	Материал
K- 07 30 14 94	5	G 1/4	60,0	30,0	39,8	Stainless steel 1.4401/1.4408
K- 07 30 14 95	7	G 3/8	80,0	33,0	44,8	Stainless steel 1.4401/1.4408
K- 07 30 14 96	9	G 1/2	110,0	57,0	56,5	Stainless steel 1.4401/1.4408
K- 07 30 14 97	13	G 3/4	110,0	61,0	60,0	Stainless steel 1.4401/1.4408
K- 07 30 14 98	15	G 1	124,0	70,0	70,0	Stainless steel 1.4401/1.4408
K- 07 30 14 99	20	G 1 1/4	152,0	75,0	77,6	Stainless steel 1.4401/1.4408
K- 07 30 15 00	25	G 1 1/2	150,0	80,0	87,0	Stainless steel 1.4401/1.4408
K- 07 30 15 01	32	G 2	155,0	85,0	102,0	Stainless steel 1.4401/1.4408

Въпреки най-старателната проверка не са изключени грешки и ние не поемаме гаранция за съдържащите се данни.