K-BKR LEICHT IG IG

Ball valves, lightweight type, female/female thread

Свойства

Диапазон на използване	Compressed air, water, non-toxic and non-corrosive gases, heating systems, agriculture
Работно налягане	Max. 40 bar
работна температура	-15 °C to +90 °C
резба описание	G thread acc. DIN EN ISO 228-1
корпус	Nickel-plated brass
лост	Alu, painted black
сачма	Nickel-plated brass
сферично уплътнение	PTFE
уплътнение на шпиндел	HNBR / EPDM / PTFE. 2 O-Rings (HNBR / EPDM) 1 gasket (PTFE) additional PTFE-gasket

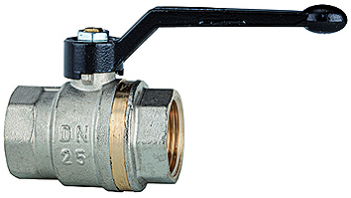

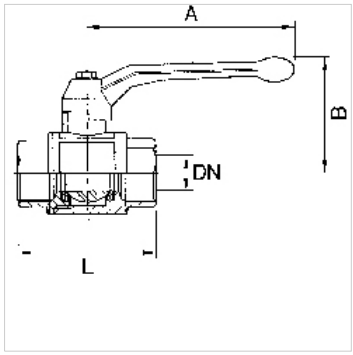

Указание

Други данни при запитване.

Артикул

Обозначение	DN	Резба	A (mm)	B (mm)	L (mm)
K- 07 30 00 33	8	G 1/4	85,0	42,0	39,0
K- 07 30 00 34	10	G 3/8	85,0	42,0	43,0
K- 07 30 00 35	15	G 1/2	85,0	46,0	50,0
K- 07 30 00 36	20	G 3/4	105,0	53,0	58,0
K- 07 30 00 37	25	G 1	105,0	57,0	69,0
K- 07 30 00 38	32	G 1 1/4	130,0	70,0	81,0
K- 07 30 00 39	40	G 1 1/2	130,0	76,0	93,0
K- 07 30 00 40	50	G 2	165,0	92,0	110,0

Въпреки най-старателната проверка не са изключени грешки и ние не поемаме гаранция за съдържащите се данни.