K-ABBLV 2

Blow-off safety valves G 1/4

Свойства

Работно налягане	0.5 - 60 bar
работна температура	max. 180 °C
уплътнения	FKM
корпус	Brass



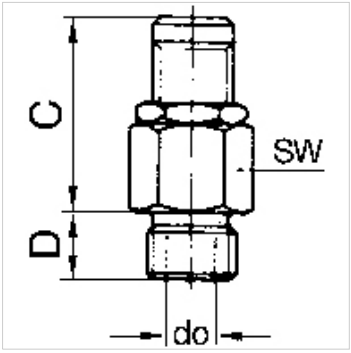

Указание

G thread acc. to DIN EN ISO 228-1, with ISO flange plate (acc. to ISO 5211)
Други данни при запитване.

Описание

Manual adjustment of the blow-off pressure (lock nut).

Указания за поръчка

For use on devices that have to be vented whenever they are turned off, either because of safety regulations or for technical reasons. The pneumatic devices are disconnected from the system and simultaneously vented each time they are shut off.

Допълнителна информация

These blow-off valves can also be supplied with a fixed setting and a TÜV type test number. Please ask for an offer.

Артикул

Обозначение	Резба	Налягане на задействане	капацитет на продухване	C (mm)	D (mm)	do (mm)	SW (mm)
K- 07 30 29 18	G 1/4	0.5 - 1.0 bar	to 50 l/min	27,0	7,0	3,0	16
K- 07 30 21 95	G 1/4	1.0 - 4.0 bar	to 200 l/min	27,0	7,0	3,0	16
K- 07 30 21 96	G 1/4	3.0 - 7.0 bar	to 350 l/min	27,0	7,0	3,0	16
K- 07 30 21 97	G 1/4	6.0 - 12.0 bar	to 650 l/min	27,0	7,0	3,0	16
K- 07 30 21 98	G 1/4	10.0 - 18.0 bar	to 870 l/min	27,0	7,0	3,0	16
K- 07 30 21 99	G 1/4	16.0 - 32.0 bar	to 1600 l/min	27,0	7,0	3,0	16
K- 07 30 22 00	G 1/4	30.0 - 60.0 bar	to 3000 l/min	27,0	7,0	3,0	16

Въпреки най-старателната проверка не са изключени грешки и ние не поемаме гаранция за съдържащите се данни.