K-DRG MANO HANSA

Pressure regulators

HANSA FLEX

Свойства

входящо налягане	Max. 16 bar
Температурен диапазон	-10 °C to +50 °C
Течности	въздух под налягане
присъединителна резба	Material: Die-cast zinc
корпус	Material: Grivory® (PA 66)
мембрана	NBR
разход на собствен въздух	Max. 1.5 l/min (depending on secondary pressure)
измерване на стойността на протичане	At P1 = 10 bar, P2 = 6.3 bar and pressure drop Δp = 1 bar



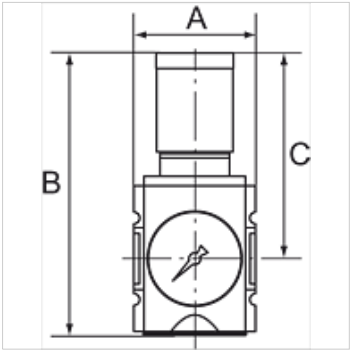

Указание

Други данни при запитване.

Описание

Diaphragm pressure regulators, self-relieving and with excellent flow rates in modern design.
The regulator knob can be latched and locked.

Указания за поръчка

The price does not include a key lock. Please order separately.

Артикул

Обозначение	Резба	диапазон на регулиране	протичане (L/min)	A (mm)	B	C (mm)	Конструктивен размер
K- 07 25 02 15	G 1/4	0.1 - 1 bar	2200	52,0	128,5 mm	95,5	1
K- 07 25 02 16	G 1/4	0.1 - 2 bar	2200	52,0	128,5 mm	95,5	1
K- 07 25 02 17	G 1/4	0.2 - 4 bar	2200	52,0	128,5 mm	95,5	1
K- 07 25 02 18	G 1/4	0.5 - 8 bar	2200	52,0	128,5 mm	95,5	1
K- 07 25 02 19	G 1/4	0.5 - 10 bar	2200	52,0	128,5 mm	95,5	1
K- 07 25 02 20	G 1/4	0.5 - 16 bar	2200	52,0	128,5 mm	95,5	1
K- 07 25 02 21	G 3/8	0.1 - 1 bar	2600	52,0	128,5 mm	95,5	1
K- 07 25 02 22	G 3/8	0.1 - 2 bar	2600	52,0	128,5 mm	95,5	1
K- 07 25 02 23	G 3/8	0.2 - 4 bar	2600	52,0	128,5 mm	95,5	1
K- 07 25 02 24	G 3/8	0.5 - 8 bar	2600	52,0	128,5 mm	95,5	1
K- 07 25 02 25	G 3/8	0.5 - 10 bar	2600	52,0	128,5 mm	95,5	1
K- 07 25 02 32	G 3/8	0.5 - 16 bar	2600	52,0	128,5 mm	95,5	2
K- 07 25 02 33	G 3/8	0.1 - 1 bar	4300	63,0	149,5 mm	110,0	2
K- 07 25 02 34	G 3/8	0.1 - 2 bar	4300	63,0	149,5 mm	110,0	2
K- 07 25 02 35	G 3/8	0.2 - 4 bar	4300	63,0	149,5 mm	110,0	2
K- 07 25 02 36	G 3/8	0.5 - 8 bar	4300	63,0	149,5 mm	110,0	2
K- 07 25 02 37	G 3/8	0.5 - 10 bar	4300	63,0	149,5 mm	110,0	2
K- 07 25 02 38	G 3/8	0.5 - 16 bar	4300	63,0	149,5 mm	110,0	2
K- 07 25 02 39	G 1/2	0.1 - 1 bar	5100	63,0	149,5 mm	110,0	2
K- 07 25 02 40	G 1/2	0.1 - 2 bar	5100	63,0	149,5 mm	110,0	2
K- 07 25 02 41	G 1/2	0.2 - 4 bar	5100	63,0	149,5 mm	110,0	2
K- 07 25 02 42	G 1/2	0.5 - 8 bar	5100	63,0	149,5 mm	110,0	2
K- 07 25 02 43	G 1/2	0.5 - 10 bar	5100	63,0	149,5 mm	110,0	2
K- 07 25 02 47	G 1/2	0.5 - 16 bar	5100	63,0	149,5 mm	110,0	2
K- 07 25 02 44	G 3/4	0.1 - 1 bar	14000	85,0	191,0 mm	137,0	4
K- 07 25 02 45	G 3/4	0.1 - 2 bar	14000	85,0	191,0 mm	137,0	4
K- 07 25 02 46	G 3/4	0.2 - 4 bar	14000	85,0	191,0 mm	137,0	4
K- 07 25 02 48	G 3/4	0.5 - 8 bar	14000	85,0	191,0 mm	137,0	4
K- 07 25 02 49	G 3/4	0.5 - 10 bar	14000	85,0	191,0 mm	137,0	4
K- 07 25 02 50	G 3/4	0.5 - 16 bar	14000	85,0	191,0 mm	137,0	4
K- 07 25 02 26	G 1	0.1 - 1 bar	14000	85,0	191,0 mm	137,0	4
K- 07 25 02 27	G 1	0.1 - 2 bar	14000	85,0	191,0 mm	137,0	4
K- 07 25 02 28	G 1	0.2 - 4 bar	14000	85,0	191,0 mm	137,0	4

Въпреки най-старателната проверка не са изключени грешки и ние не поемаме гаранция за съдържащите се данни.

K-DRG MANO HANSA

Pressure regulators

Артикул

Обозначение	Резба	диапазон на регулиране	протичане (L/min)	A (mm)	B	C (mm)	Конструктивен размер
K- 07 25 02 29	G 1	0.5 - 8 bar	14000	85,0	191,0 mm	137,0	4
K- 07 25 02 30	G 1	0.5 - 10 bar	14000	85,0	191,0 mm	137,0	4
K- 07 25 02 31	G 1	0.5 - 16 bar	14000	85,0	191,0 mm	137,0	4

Принадлежности

K-STECKSCHLOSS	Key lock

Резервни части

K-HALTERBAUSATZ HANSA	Holder HANSA
K-SCHALTTAFELMUTTER HANSA	Nut HANSA
K-DICHTSATZ HANSA	Set of seals HANSA

Въпреки най-старателната проверка не са изключени грешки и ние не поемаме гаранция за съдържащите се данни.