K-PRAEZI DRG DRUCKVER HANSA

Precision pressure regulators with continuous pressure supply

Свойства

входящо налягане	Max. 16 bar
Температурен диапазон	-10 °C to +50 °C
Течности	въздух под налягане
присъединителна резба	Material: Die-cast zinc
корпус	Material: Grivory® (PA 66)
мембрана	NBR
разход на собствен въздух	2.6 l/min at P2 = 6 bar (depending on secondary pressure)
измерване на стойността на протичане	At P1 = 10 bar, P2 = 6.3 bar and pressure drop Δp = 1 bar



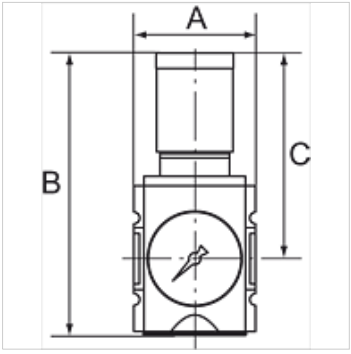

Указание

Други данни при запитване.

Описание

Precision diaphragm pressure regulators with self-relieving design and excellent flow rates in modern design for mounting side by side.
By assembling two or more controllers together, it is possible to supply several working air circuits with different pressures via a single supply line.

Указания за поръчка

The price does not include a key lock. Please order separately.

Артикул

Обозначение	Резба	диапазон на регулиране	протичане (L/min)	A (mm)	B	C (mm)
K- 07 25 09 66	G 1/4	0.1 - 1 bar	2200	52,0	128,5 mm	95,5
K- 07 25 09 67	G 1/4	0.1 - 2 bar	2200	52,0	128,5 mm	95,5
K- 07 25 09 68	G 1/4	0.2 - 4 bar	2200	52,0	128,5 mm	95,5
K- 07 25 09 69	G 1/4	0.5 - 8 bar	2200	52,0	128,5 mm	95,5
K- 07 25 09 70	G 1/4	0.5 - 10 bar	2200	52,0	128,5 mm	95,5
K- 07 25 09 71	G 3/8	0.1 - 1 bar	2700	52,0	128,5 mm	95,5
K- 07 25 09 72	G 3/8	0.1 - 2 bar	2700	52,0	128,5 mm	95,5
K- 07 25 09 73	G 3/8	0.2 - 4 bar	2700	52,0	128,5 mm	95,5
K- 07 25 09 74	G 3/8	0.5 - 8 bar	2700	52,0	128,5 mm	95,5
K- 07 25 09 75	G 3/8	0.5 - 10 bar	2700	52,0	128,5 mm	95,5
K- 07 25 09 76	G 3/8	0.1 - 1 bar	4300	63,0	149,5 mm	110,0
K- 07 25 09 77	G 3/8	0.1 - 2 bar	4300	63,0	149,5 mm	110,0
K- 07 25 09 78	G 3/8	0.2 - 4 bar	4300	63,0	149,5 mm	110,0
K- 07 25 09 79	G 3/8	0.5 - 8 bar	4300	63,0	149,5 mm	110,0
K- 07 25 09 80	G 3/8	0.5 - 10 bar	4300	63,0	149,5 mm	110,0
K- 07 25 09 81	G 1/2	0.1 - 1 bar	5000	63,0	149,5 mm	110,0
K- 07 25 09 82	G 1/2	0.1 - 2 bar	5000	63,0	149,5 mm	110,0
K- 07 25 09 83	G 1/2	0.2 - 4 bar	5000	63,0	149,5 mm	110,0
K- 07 25 09 84	G 1/2	0.5 - 8 bar	5000	63,0	149,5 mm	110,0
K- 07 25 09 85	G 1/2	0.5 - 10 bar	5000	63,0	149,5 mm	110,0

Принадлежности

K-STECKSCHLOSS	Key lock

Резервни части

K-HALTERBAUSATZ HANSA	Holder HANSA
K-SCHALTTAFELMUTTER HANSA	Nut HANSA
K-DICHTSATZ HANSA	Set of seals HANSA

Въпреки най-старателната проверка не са изключени грешки и ние не поемаме гаранция за съдържащите се данни.