K-DRG DRVS MULTIFIX MINI

Pressure regulators with pressure supply at both ends

Свойства

входящо налягане	Max. 16 bar
температура на средата	max. 60 °C
околна температура	Max. 60 °C
уплътняващ материал	NBR
пружинен калпак	POM-brass
корпус	Die-cast zinc
измерване на стойността на протичане	At P1 = 8 bar, P2 = 6 bar and pressure drop Δp = 1 bar



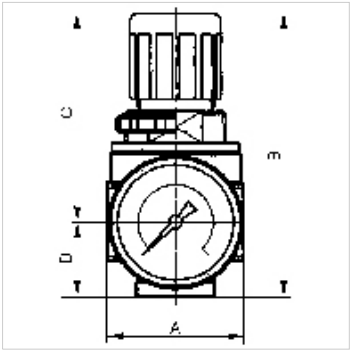

Указание

Други данни при запитване.

Описание

Diaphragm pressure regulators with self-relieving design for mounting side by side. The pressure setting can be locked by pushing the button down.
By assembling two or more controllers together, it is possible to supply several working air circuits with different output pressures via a single supply line.

Указания за поръчка

The port for the output pressure (P2) is on the rear! K-07250028: G 1/8. Lockable pressure regulator: K-07250027. If several devices in the »multifix-mini« Series are assembled together, the maximum working pressure is 12 bar.

Артикул

Обозначение	Резба	диапазон на регулиране	протичане (L/min)	A (mm)	B	C (mm)	D (mm)	DN	Конструктивен размер
K- 07 25 00 28	G 1/4	0.1 - 3 bar	1200	40,0	85,0 mm	63,0	22,0	5	0
K- 07 25 00 29	G 1/4	0.2 - 6 bar	1200	40,0	85,0 mm	63,0	22,0	5	0
K- 07 25 00 27	G 1/4	0.5 - 10 bar	1200	40,0	85,0 mm	63,0	22,0	5	0

Резервни части

K-HALTERBAUSATZ	Holder
K-SCHALTTAFELMUTTER	Nut
K-KOPPELPAKET MEHR	Coupling packet
K-VERSCHLEI-SATZ	Set of wearing parts

Въпреки най-старателната проверка не са изключени грешки и ние не поемаме гаранция за съдържащите се данни.