K-WTEH KOMBI PC-BEHAELTER S H ABLV

Combination service units with polycarbonate bowl, bowl guard and manual drain valve

HANSA FLEX

Свойства

входящо налягане	Max. 16 bar (polycarbonate bowl), Max. 25 bar (metal bowl)
температура на средата	max. 50 °C
околна температура	Max. 50 °C
ширина на порите във филтриращия елемент	50 µm
уплътняващ материал	NBR
корпус	Die-cast zinc, Spring bonnet; PA
наставка прокапване	PA
измерване на стойността на протичане	At P1 = 8 bar, P2 = 6 bar and pressure drop Δp = 1 bar



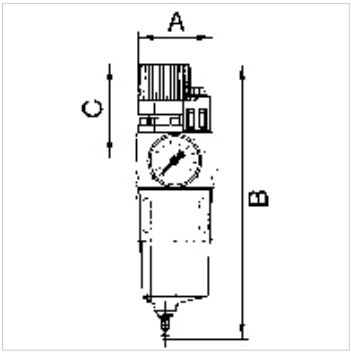

Указание

Други данни при запитване.

Описание

A filter, pressure regulator and oil-mist lubricator combined in a single device with an extremely compact design. The pressure setting can be locked by pushing the knob down. Oil can be filled under pressure.

Артикул

Обозначение	Резба	диапазон на регулиране	протичане (L/min)	A (mm)	B	C (mm)
K- 07 25 08 45	G 1/4	0.5 - 10 bar	1400	67,0	217,0 mm	68,5
K- 07 25 08 47	G 1/4	0.5 - 16 bar	1000	67,0	217,0 mm	68,5
K- 07 25 08 49	G 3/8	0.5 - 10 bar	1400	67,0	217,0 mm	68,5
K- 07 25 08 51	G 3/8	0.5 - 16 bar	1000	67,0	217,0 mm	68,5
K- 07 25 08 53	G 1/2	0.5 - 10 bar	1400	65,0	217,0 mm	68,5
K- 07 25 08 55	G 1/2	0.5 - 16 bar	1000	65,0	217,0 mm	68,5
K- 07 25 08 57	G 3/4	0.5 - 10 bar	3400	97,0	296,5 mm	96,5
K- 07 25 08 59	G 3/4	0.5 - 16 bar	2800	97,0	296,5 mm	96,5
K- 07 25 08 61	G 1	0.5 - 10 bar	3400	93,0	296,5 mm	96,5
K- 07 25 08 63	G 1	0.5 - 16 bar	2800	93,0	296,5 mm	96,5

Резервни части

K-HALTERBAUSATZ SERIE 81	Holder for series 81
K-ERSATZBEHAEL KOMBI	Spare tank
K-SCHUTZKORB G	Protective cage
K-VERSCHLEI-SATZ	Set of wearing parts
K-TROPFAUFSATZ POLYCARBO	Drip attachment polycarbonate
K-TROPFAUFSATZ METALL	Drip attachment metal
K-FILTERELEMENT	Filter element
K-ABLASSVENTIL AUTO	Fully-automatic drain valve with Adapter G 1/8
K-RD NIPPEL KURZ 1	Reducing nipples, short type
K-XV AGM 2	Double nipples, parallel male thread

Въпреки най-старателната проверка не са изключени грешки и ние не поемаме гаранция за съдържащите се данни.