K-FI SPEZI PC-BEHAELTER H STANDAD

Special filters with polycarbonate bowl, with semi-automatic drain valve to G 1/2 and manual drain valve from G 3/4

Свойства

входящо налягане	Max. 16 bar (polycarbonate bowl / bowl guard), Max. 25 bar (metal bowl)
температура на средата	max. 50 °C
околна температура	Max. 50 °C
ефективност	99.999 %
ширина на порите във филтриращия елемент	0.01 µm
корпус	Die-cast zinc, painted silver
измерване на стойността на протичане	At P2 = 6 bar and pressure drop Δp = 1 bar



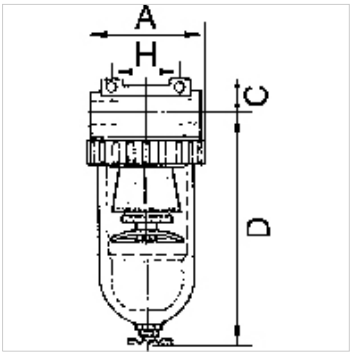

Указание

Други данни при запитване.

Описание

For all applications with particularly strict compressed air purity requirements. The separating efficiency of these filters permits very fine oil vapour particles and micro-fine suspended particles to be filtered. A standard filter should always be connected upstream to trap coarse impurities and protect the micro-filter inserts.

Артикул

Обозначение	Резба	протичане (L/min)	A (mm)	C (mm)	D (mm)	H (mm)	DN
K- 07 25 10 76	G 3/8	380	48,0	14,0	131,6	38,0	6
K- 07 25 10 83	G 3/4	7000	133,0	36,0	206,0	134,0	20
K- 07 25 10 86	G 1	7000	133,0	36,0	206,0	120,0	25

Резервни части

K-HALTERBAUSATZ STANDARD	Holder
K-FILTERELEMENT STANDARD	Filter element
K-SCHUTZKORB G	Protective cage
K-XV AGM MS NI	Double nipples, parallel male thread, nickel-plated brass
K-LOESBARE DOPPELNIPPEL MS	Double nipples

Въпреки най-старателната проверка не са изключени грешки и ние не поемаме гаранция за съдържащите се данни.