K-WTEH 2-TLG PC-BEHAEL MANO STAN-MI

Service units, 2-piece with polycarbonate bowl and pressure gauge

HANSA FLEX

Свойства

входящо налягане	Max. 16 bar (polycarbonate bowl), Max. 25 bar (metal bowl)
температура на средата	max. 60 °C
околна температура	Max. 60 °C
протичане	350 l/min (2-piece), 300 l/min (3-piece)
ширина на порите във филтриращия елемент	5 µm
уплътняващ материал	NBR
корпус	Die-cast zinc, painted silver
наставка прокапване	PA (polycarbonate bowl), Zinc-glass-NBR (metal bowl)
Drain valve	Semi-automatic for variant with polycarbonate bowl, Manual for variant with metal bowl
измерване на стойността на протичане	At P1 = 8 bar, P2 = 6 bar and pressure drop Δp = 1 bar



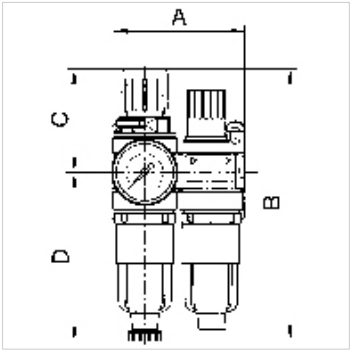

Указание

Други данни при запитване.

Описание

Compact, two or three-piece service units consisting of a reversible diaphragm pressure regulator, independent of inlet pressure, with self-relieving design, combined with a centrifugal separator and a proportional lubricator.

Артикул

Обозначение	Резба	диапазон на регулиране	A (mm)	B	C (mm)	D (mm)	DN
K- 07 25 14 89	G 1/8	0.5 - 10 bar	85,0	167,0 mm	65,0	102,0	5
K- 07 25 14 91	G 1/4	0.5 - 10 bar	85,0	167,0 mm	65,0	102,0	5

Резервни части

K-HALTERBAUSATZ	Holder
K-SCHALTTAFELMUTTER	Nut
K-ERSATZBEHAELTER MULTI MINI	Spare tank »multifix-mini« & »standard-mini«
K-PC-BEHAELTER FILTER MULTIFIX	Polycarbonate tank filter
K-VERSCHLEI-SATZ	Set of wearing parts
K-FILTERELEMENT	Filter element
K-AUTOMAT ABLASSVENTIL	Automatic drain valve
K-TROPFAUFSATZ POLYCARBO	Drip attachment polycarbonate
K-TROPFAUFSATZ METALL	Drip attachment metal
K-LOESBARE DOPPELNIPPEL MS	Double nipples
K-XV AGM MS NI	Double nipples, parallel male thread, nickel-plated brass

Въпреки най-старателната проверка не са изключени грешки и ние не поемаме гаранция за съдържащите се данни.