K-FI REGL PC-BEHAEL MANO VARIOBLOC

Filter regulators with polycarbonate bowl and pressure gauge

HANSA FLEX

Свойства

входящо налягане	Max. 16 bar (polycarbonate bowl), Max. 20 bar (metal bowl)
температура на средата	max. 50 °C
околна температура	Max. 50 °C (polycarbonate bowl), Max. 80 °C (metal bowl)
ширина на порите във филтриращия елемент	40 µm
уплътняващ материал	NBR
пружинен калпак	POM
корпус	Die-cast zinc
мембрана	NBR
Drain valve	Manual
измерване на стойността на протичане	At P1 = 10 bar, P2 = 6 bar and pressure drop Δp = 1 bar



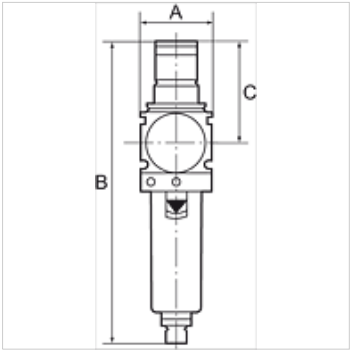

Указание

Други данни при запитване.

Описание

Reversible diaphragm pressure regulators, independent of inlet pressure, with self-relieving design, combined with a centrifugal separator. The pressure setting can be locked by pushing the knob down. Approved series in modern industrial design, with the following key benefits: Simple handling, Convenient modular assembly thanks to innovative fasteners, Excellent flow values.

Указания за поръчка

Filter regulators are also available with bowl guard or metal bowl. Filter regulators are also available in lockable version. Please ask for more information.

Допълнителна информация

Filter regulators are also available with bowl guard or metal bowl. Filter regulators are also available in lockable version. Please ask for more information.

Артикул

Обозначение	Резба	диапазон на регулиране	протичане (L/min)	A (mm)	B	C (mm)
K- 07 25 06 85	G 1/4	0.5 - 10 bar	2000	48,0	203,0 mm	68,0
K- 07 25 06 87	G 3/8	0.5 - 10 bar	3000	48,0	203,0 mm	68,0
K- 07 25 06 89	G 1/2	0.5 - 10 bar	5500	70,0	273,0 mm	98,0
K- 07 25 06 91	G 3/4	0.5 - 10 bar	6500	70,0	273,0 mm	98,0
K- 07 25 06 93	G 1	0.5 - 10 bar	6500	124,0	273,0 mm	98,0

Резервни части

K-VERSCHLEI-SATZ VARIOBLOC	Set of wearing parts
K-ERSATZBEHAELTER VARIOBLOC POLY	Spare tank Polycarbonat
K-FILTERELEMENT VARIOBLOC	Filter element
K-ABLASSVENTIL AUTO	Fully-automatic drain valve with Adapter G 1/8

Въпреки най-старателната проверка не са изключени грешки и ние не поемаме гаранция за съдържащите се данни.