# K-WKV 3/2 SCHLS STECK

3/2-way toggle valves, discharge port on thread, plug-in connector

## Свойства

| | |
|---|---|
| **Работно налягане** | макс. 8 bar |
| **Температурен диапазон** | 0 °C to +70 °C |
| **резба контролен панел** | M 12 x 0.75 (sheet thickness max. 4 mm) |
| **вътрешни части** | Brass with a bare metal surface |
| **уплътняващ материал** | NBR |
| **кух болт, накланящо се рамо, прибиращ се лост** | Nickel-plated brass |
| **уплътнения (които не се губят)** | Polyamide (glass fibre-reinforced) |



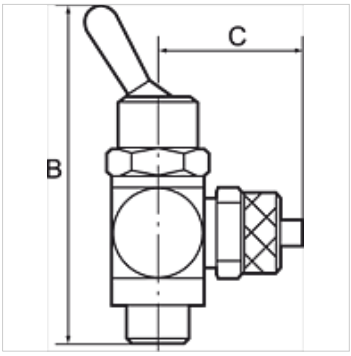


## Указание

Други данни при запитване.

## Описание

Manually operated toggle valves, 2/2 and 3/2-way types. For all applications where compressed air must be switched on or off quickly and easily or a cylinder operated manually. Designed as a banjo-type valve with a hollow bolt and ring piece. Suitable for screwing directly into the equipment or for panel mounting. Compact type of construction, also ideal where space is restricted.

## Артикул

| Обозначение | Изпълнение | C (mm) | за маркуч | Резба | SW | B (mm) |
|---|---|---|---|---|---|---|
| **K- 07 15 07 31** | 3/2-way | 19,5 | 4 mm | G 1/8 | 14 mm | 55,0 |
| **K- 07 15 07 32** | 3/2-way | 22,0 | 6 mm | G 1/8 | 14 mm | 55,0 |
| **K- 07 15 07 33** | 3/2-way | 22,5 | 8 mm | G 1/8 | 14 mm | 55,0 |
| **K- 07 15 07 29** | 3/2-way | 23,5 | 6 mm | G 1/4 | 17 mm | 60,0 |
| **K- 07 15 07 30** | 3/2-way | 24,0 | 8 mm | G 1/4 | 17 mm | 60,0 |
| **K- 07 15 07 28** | 3/2-way | 26,5 | 10 mm | G 1/4 | 17 mm | 60,0 |

*Въпреки най-старателната проверка не са изключени грешки и ние не поемаме гаранция за съдържащите се данни.*