K-BKR KL SERIE 374

Ball valves, 374 series

Свойства

Работно налягане	max. 70 bar (Depending on Temperature)
работна температура	Max. 150 °C
уплътнение	PTFE
ръчен лост	Stainless steel 1.4301



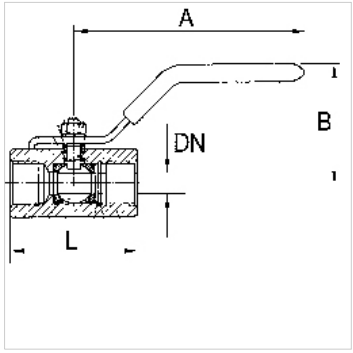

Указание

G thread acc. to DIN EN ISO 228-1, with ISO flange plate (acc. to ISO 5211)
Други данни при запитване.

Указания за поръчка

For use on devices that have to be vented whenever they are turned off, either because of safety regulations or for technical reasons. The pneumatic devices are disconnected from the system and simultaneously vented each time they are shut off.

Допълнителна информация

G thread acc. DIN EN ISO 228-1

Артикул

Обозначение	DN	Резба	A (mm)	B (mm)	L (mm)	Материал
K- 07 30 15 32	5	G 1/4	62,0	30,0	47,0	Stainless steel 1.4401/1.4408
K- 07 30 15 33	7	G 3/8	82,0	30,0	51,0	Stainless steel 1.4401/1.4408
K- 07 30 15 34	9	G 1/2	92,0	45,0	64,0	Stainless steel 1.4401/1.4408
K- 07 30 15 35	13	G 3/4	94,0	50,0	68,0	Stainless steel 1.4401/1.4408

Въпреки най-старателната проверка не са изключени грешки и ние не поемаме гаранция за съдържащите се данни.