K-DRG DRV 200 STANDARD

DRV 200 pressure regulators, standard type

HANSA-FLEX

Свойства

входящо налягане	Max. 25 bar (Series 200 and 300 Series), Max. 40 bar (400 Series)
Температурен диапазон	Max. 75 °C
съотношение на намаляване	Max. 10:1 (200 Series), Max. 20:1 (300 Series), Max. 6:1 (400 Series)
уплътняващ материал	NBR
пружинен калпак	Pressed brass up to DN 25, Grey cast iron from DN 32
корпус	Red brass 2.1096.01



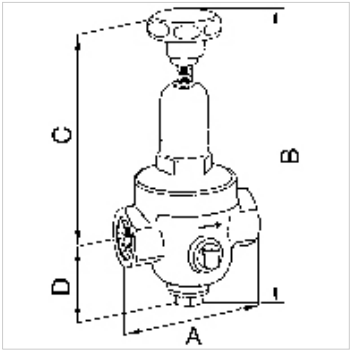

Указание

Други данни при запитване.

Описание

Diaphragm pressure regulators with non-self-relieving design and non-pressure-reduced single-seated valve. Very precise adjustment. Good response characteristic because of only a few moving parts which hence minimal friction. Ideal for compressed air, nitrogen and other neutral, non-flammable gases, but only suitable for liquids with comparatively low flow rates.

Указания за поръчка

други размери при запитване

Допълнителна информация

други изпълнения при запитване

Артикул

Обозначение	Резба	диапазон на регулиране	протичане kvs стойност (m3/h)	A (mm)	B	C (mm)	D (mm)
K- 07 25 04 86	G 1/4	1.5 - 8 bar	0,5	70,0	167,0 mm	120,0	47,0
K- 07 25 04 87	G 3/8	1.5 - 8 bar	0,6	70,0	168,0 mm	121,0	47,0
K- 07 25 04 88	G 1/2	1.5 - 8 bar	1,2	85,0	188,5 mm	142,0	46,5
K- 07 25 04 89	G 3/4	1.5 - 8 bar	1,3	85,0	189,5 mm	143,0	46,5
K- 07 25 04 90	G 1	1.5 - 8 bar	1,6	95,0	242,0 mm	186,0	56,0
K- 07 25 04 91	G 1 1/4	1.5 - 8 bar	4,2	104,0	323,0 mm	262,0	61,0
K- 07 25 04 92	G 1 1/2	1.5 - 8 bar	4,5	108,0	323,0 mm	262,0	61,0
K- 07 25 04 93	G 2	1.5 - 8 bar	7,2	146,5	376,0 mm	306,0	70,0

Резервни части

K-VERSCHLEI-SATZ	Set of wearing parts

Въпреки най-старателната проверка не са изключени грешки и ние не поемаме гаранция за съдържащите се данни.