K-ZFL ABSP-KLAPPEN EINFACH

Butterfly valves, with single-acting actuator - spring to close, min. pilot pressure 5 bar

HANSA FLEX

Свойства

Конструкция	Pneumatic actuators, in double- or single acting version
Работно налягане	Max. 16 bar
работна температура	-15 °C to +120 °C
Течности	Water / steam, salt water, salt water, ester, ketone, alkali, caustic soda, sodium hydroxide. Not recommended for hydrocarbons
налягане на управление	5.5 bar
клапанен адаптер	Supplied as standard, operated by a 3/2- or 5/2-way valve
ъгъл на завъртане	90 °
задвижване	aluminium eloxed
уплътнение на задвижване	NBR
корпус	Grey cast iron GG25 epoxy resin coated, RAL 5015
уплътнение	EPDM
вал	SS416
гофрирано уплътнение	EPDM
задействане	



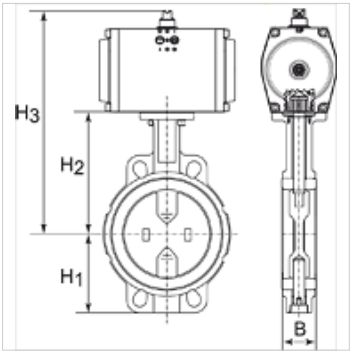

Указание

Други данни при запитване.

Артикул

Обозначение	шайба	DN	B (mm)	H1 (mm)	H2 (mm)	H3 (mm)	L (mm)
K- 07 30 03 36	Stainless Steel CF8M/1.4404	40	38,0	68,0	108,0	238,0	94,0
K- 07 30 03 37	Stainless Steel CF8M/1.4404	50	47,0	71,0	143,0	273,0	100,0
K- 07 30 03 38	Stainless Steel CF8M/1.4404	65	49,0	78,0	155,0	285,0	115,0
K- 07 30 03 39	Stainless Steel CF8M/1.4404	80	47,0	89,0	162,0	292,0	127,0
K- 07 30 03 40	Stainless Steel CF8M/1.4404	100	56,0	102,0	178,0	348,0	163,0
K- 07 30 03 42	Stainless Steel CF8M/1.4404	125	59,0	123,0	191,0	361,0	190,0
K- 07 30 03 44	Stainless Steel CF8M/1.4404	150	59,0	138,0	265,0	395,0	216,0

Въпреки най-старателната проверка не са изключени грешки и ние не поемаме гаранция за съдържащите се данни.