K-DVST OHNE REGLER

Pressure booster without regulator

Свойства

входящо налягане	2 - 10 bar
изходящо налягане	Max. 20 bar (regulated: max. 16 bar)
Температурен диапазон	-10 °C to +50 °C (40 mm bore), -10 °C to +60 ° C (63 mm bore)
Течности	Filtered, unlubricated or lubricated compressed air (if lubrication is used, it must be continuous)
уплътняващ материал	NBR
регулатор налягане	With plastic body
корпус	Aluminium, anodised
тръба	Anodised aluminium jacket
Монтаж	Any position, with 4 mounting holes
P2:P1	2:1



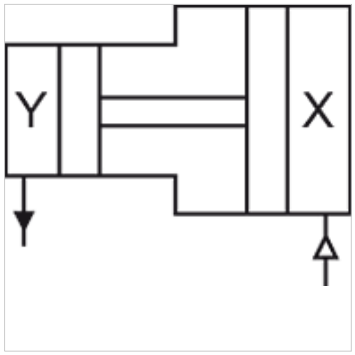

Указание

For information about calculating the filling times for different tank sizes, refer to the above-mentioned data sheet available on our website
Други данни при запитване.

Описание

Pressure multipliers (boosters) allow a separate compressed air store with up to double pressure to be installed for selected devices in a compressed air system without an external energy source, i.e. it is possible to work with a maximum pressure of 20 bar in a standard 10 bar system (maximum ratio 2:1). This is achieved using a double piston, which is operated by a combination of integrated check valves in such a way that the booster works automatically until the target pressure is reached in a compressed air tank and is then automatically switched off. A tank is always required to build up the pressure and store the compressed air!

Допълнителна информация

Fixing bracket with nut

Артикул

Обозначение	Съединение	Ø бутало (mm)	H (mm)	L (mm)
K- 07 25 08 64	G 1/8	40,0	64,0	194,0
K- 07 25 08 66	G 3/8	63,0	98,0	290,0

Принадлежности

K-ZUBEH ERSATZ LUFT BOOSTER	Accessories / spare parts for Air-air-multiplicator (booster)

Въпреки най-старателната проверка не са изключени грешки и ние не поемаме гаранция за съдържащите се данни.