K-S-BKR M ENTL-BOHR ABSCHL

Safety ball valves, lockable, with relief port

Свойства

работна температура	-10 °C to + 100 °C (depending on operating pressure)
резбови отвор за обезвъздушаване	M 5 (>1": Relief port G 1/4")
резба описание	Rp thread acc. to EN 10226
корпус	Nickel-plated brass
ръчен лост	Steel - PVC coated
сачма	hardchrome-plated brass
сферично уплътнение	PTFE
уплътнение на шпиндел	PTFE



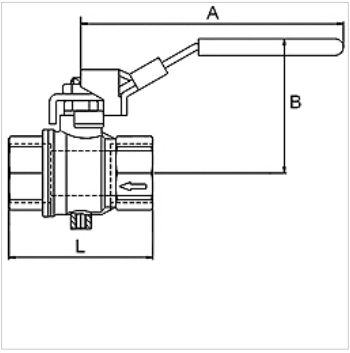

Указание

G thread acc. to DIN EN ISO 228-1, with ISO flange plate (acc. to ISO 5211)
Други данни при запитване.

Описание

2/2-way safety ball valves, two parts, made of nickel-plated brass. Specially designed for pneumatic applications.
The valve shuts off the supply line and bleds the application area. Lockable hand lever in closed position.

Допълнителна информация

The price does not include a padlock. Please order separately.

Артикул

Обозначение	DN	Резба	PN (bar)	A (mm)	B (mm)	L (mm)
K- 07 30 29 29	8	Rp 1/4	14	96,0	49,0	45,0
K- 07 30 29 30	10	Rp 3/8	14	96,0	49,0	45,0
K- 07 30 29 31	15	Rp 1/2	14	96,0	51,0	59,0
K- 07 30 29 32	20	Rp 3/4	14	117,0	60,0	64,0
K- 07 30 29 33	25	Rp 1	14	117,0	64,0	81,0
K- 07 30 29 34	32	Rp 1 1/4	14	157,0	80,0	93,0
K- 07 30 29 35	40	Rp 1 1/2	14	157,0	86,0	102,0
K- 07 30 29 36	50	Rp 2	14	157,0	93,0	121,0

Принадлежности

K-VORHAENGESCHLOSS	Padlock

Въпреки най-старателната проверка не са изключени грешки и ние не поемаме гаранция за съдържащите се данни.