K-WTEH 3-TLG PC SCHU VARIOBLOC

Service units, 3-piece with polycarbonate bowl and bowl guard

Свойства

входящо налягане	Max. 16 bar (polycarbonate bowl), Max. 20 bar (metal bowl)
температура на средата	max. 50 °C
околна температура	Max. 50 °C (polycarbonate bowl), Max. 80 °C (metal bowl)
ширина на порите във филтриращия елемент	40 µm
уплътняващ материал	NBR
пружинен калпак	POM
корпус	Die-cast zinc
мембрана	NBR
наставка прокапване	PA
Drain valve	Manual
измерване на стойността на протичане	At P1 = 10 bar, P2 = 6 bar and pressure drop Δp = 1 bar



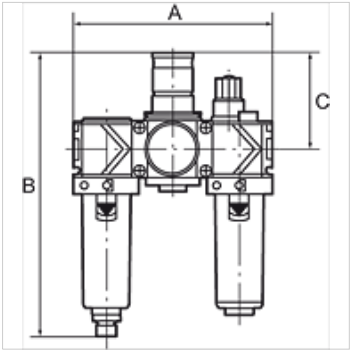

Указание

Други данни при запитване.

Описание

Two or three-piece service units consisting of a reversible diaphragm pressure regulator, independent of inlet pressure, with self-relieving design, combined with a centrifugal separator and a proportional lubricator. Approved series in modern industrial design, with the following key benefits: Simple handling, Convenient modular assembly thanks to innovative fasteners, Excellent flow values.

Указания за поръчка

Service units are also available with bowl guard or metal bowl. Service units are also available in other control ranges (0.5 - 6 bar and 0.5 - 16 bar) and in lockable version. Please ask for more information.

Допълнителна информация

Service units are also available with bowl guard or metal bowl. Service units are also available in other control ranges.

Артикул

Обозначение	Резба	диапазон на регулиране	протичане (L/min)	A (mm)	B	C (mm)
K- 07 25 22 86	G 1/4	0.5 - 10 bar	1500	144,0	201,0 mm	68,0
K- 07 25 22 85	G 3/8	0.5 - 10 bar	1800	144,0	201,0 mm	68,0
K- 07 25 22 84	G 1/2	0.5 - 10 bar	3400	210,0	247,0 mm	98,0
K- 07 25 22 83	G 3/4	0.5 - 10 bar	5000	210,0	247,0 mm	98,0
K- 07 25 22 82	G 1	0.5 - 10 bar	5000	264,0	247,0 mm	98,0

Въпреки най-старателната проверка не са изключени грешки и ние не поемаме гаранция за съдържащите се данни.