WUH

почиствач, WUH

Свойства

Конструкция	почиствач
Скорост при плъзгане max.	4,0 m/s
Температура min.	-40 °C
Температура max.	110 °C
Течности	минерално масло
Монтаж	деформирайте почиствача под формата на бъбрек и го притиснете в поемащия жлеб
Приложение	For the usage at higher pollution, for e.g.: Mining foundries
Материал	PU 93° Shore A

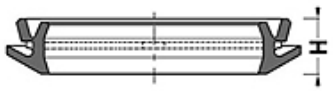

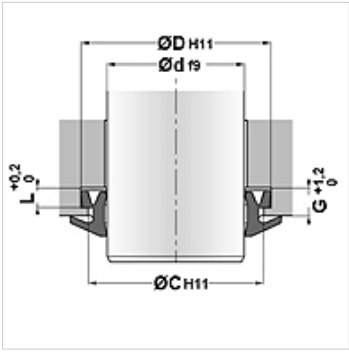

Артикул

Обозначение	C (mm)	D (mm)	d (mm)	G (mm)	H (mm)	L (mm)
WUH-26	32,0	34,0	26	5,00	8,7	4,0
WUH-30	36,0	38,0	30	5,00	8,7	4,0
WUH-32	38,0	40,0	32	5,00	8,7	4,0
WUH-36	42,0	44,0	36	5,00	8,7	4,0
WUH-40	46,0	48,0	40	5,00	8,7	4,0
WUH-45	51,0	53,0	45	5,00	8,7	4,0
WUH-50	56,0	58,0	50	5,00	8,7	4,0
WUH-52	58,0	60,0	52	5,00	8,7	4,0
WUH-56	62,0	64,0	56	5,00	8,7	4,0
WUH-60	66,0	68,0	60	5,00	8,7	4,0
WUH-68	74,0	76,0	68	5,00	8,7	4,0
WUH-70	76,0	78,0	70	5,00	8,7	4,0
WUH-75	81,0	83,0	75	5,00	8,7	4,0
WUH-80	86,0	88,0	80	5,00	8,7	4,0
WUH-100	107,0	110,0	100	8,10	11,7	6,3

Въпреки най-старателната проверка не са изключени грешки и ние не поемаме гаранция за съдържащите се данни.