# XVR
## Šroubení k zašroubování

HANSA-FLEX

### Vlastnosti

| | |
|---|---|
| **Přípoj 1** | Vnější cylindrický závit BSP |
| **Tvar těsnění 1** | Tvar B |
| **Přípoj 2** | metrický vnější cylindrický závit |
| **Tvar těsnění 2** | Vnitřní kužel 24° |
| **Konstrukce** | hrdlové šroubení |
| **Provedení** | přímé |
| **Norma** | DIN 2353<br>ISO 8434-1 |
| **Obsah dodávky** | hrdlo (bez přesuvné matice a zářezného kroužku) |
| **Materiál** | Ocel |
| **Povrchová ochrana** | galvanicky potažený |



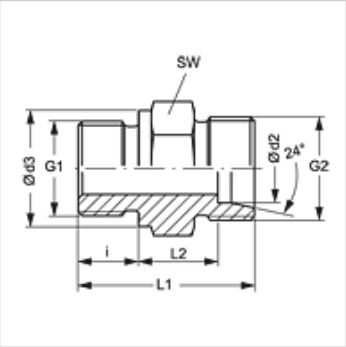


### Upozornění

Upozornění k montáži, vestavbě, tlakovému zatížení a povoleným provozním teplotám si prosím vyhledejte v technických dokumentacích fitinkových šroubení.

### Výrobek

| Označení | Typová řada | Provozní tlak v barech | Ø d2 (mm) | G1 | G2 | Ø d3 (mm) | i (mm) | L1 (mm) | L2 (mm) | SW (mm) |
|---|---|---|---|---|---|---|---|---|---|---|
| **XVR NW 04 HL** | L | PN 315 | 6 | G 1/8" -28 | M 12 x 1,5 | 14 | 8 | 23,5 | 8,5 | 14 |
| **XVR NW 04 HL 1/4** | L | PN 315 | 6 | G 1/4" -19 | M 12 x 1,5 | 18 | 12 | 29,0 | 10,0 | 19 |
| **XVR NW 04 HL 3/8** | L | PN 315 | 6 | G 3/8" -19 | M 12 x 1,5 | 22 | 12 | 30,5 | 11,5 | 22 |
| **XVR NW 04 HL 1/2** | L | PN 315 | 6 | G 1/2" -14 | M 12 x 1,5 | 26 | 14 | 33,0 | 12,0 | 27 |
| **XVR NW 06 HL 1/8** | L | PN 315 | 8 | G 1/8" -28 | M 14 x 1,5 | 14 | 8 | 24,0 | 9,0 | 14 |
| **XVR NW 06 HL** | L | PN 315 | 8 | G 1/4" -19 | M 14 x 1,5 | 18 | 12 | 29,0 | 10,0 | 19 |
| **XVR NW 06 HL 3/8** | L | PN 315 | 8 | G 3/8" -19 | M 14 x 1,5 | 22 | 12 | 30,5 | 11,5 | 22 |
| **XVR NW 06 HL 1/2** | L | PN 315 | 8 | G 1/2" -14 | M 14 x 1,5 | 26 | 14 | 33,0 | 12,0 | 27 |
| **XVR NW 08 HL 1/8** | L | PN 315 | 10 | G 1/8" -28 | M 16 x 1,5 | 14 | 8 | 25,5 | 10,5 | 17 |
| **XVR NW 08 HL** | L | PN 315 | 10 | G 1/4" -19 | M 16 x 1,5 | 18 | 12 | 30,0 | 11,0 | 19 |
| **XVR NW 08 HL 3/8** | L | PN 315 | 10 | G 3/8" -19 | M 16 x 1,5 | 22 | 12 | 31,5 | 12,5 | 22 |
| **XVR NW 08 HL 1/2** | L | PN 315 | 10 | G 1/2" -14 | M 16 x 1,5 | 26 | 14 | 34,0 | 13,0 | 27 |
| **XVR NW 10 HL 1/8** | L | PN 315 | 12 | G 1/8" -28 | M 18 x 1,5 | 14 | 8 | 26,5 | 11,5 | 19 |
| **XVR NW 10 HL 1/4** | L | PN 315 | 12 | G 1/4" -19 | M 18 x 1,5 | 18 | 12 | 31,0 | 12,0 | 19 |
| **XVR NW 10 HL** | L | PN 315 | 12 | G 3/8" -19 | M 18 x 1,5 | 22 | 12 | 31,5 | 12,5 | 22 |
| **XVR NW 10 HL 1/2** | L | PN 315 | 12 | G 1/2" -14 | M 18 x 1,5 | 26 | 14 | 34,0 | 13,0 | 27 |
| **XVR NW 10 HL 3/4** | L | PN 315 | 12 | G 3/4" -14 | M 18 x 1,5 | 32 | 16 | 37,0 | 14,0 | 32 |
| **XVR NW 13 HL 1/4** | L | PN 315 | 15 | G 1/4" -19 | M 22 x 1,5 | 18 | 12 | 32,0 | 13,0 | 24 |
| **XVR NW 13 HL 3/8** | L | PN 250 | 15 | G 3/8" -19 | M 22 x 1,5 | 22 | 12 | 33,0 | 14,0 | 24 |
| **XVR NW 13 HL** | L | PN 250 | 15 | G 1/2" -14 | M 22 x 1,5 | 26 | 14 | 35,0 | 14,0 | 27 |
| **XVR NW 13 HL 3/4** | L | PN 250 | 15 | G 3/4" -14 | M 22 x 1,5 | 32 | 16 | 38,0 | 15,0 | 32 |
| **XVR NW 13 HL 1** | L | PN 250 | 15 | G 1" -11 | M 22 x 1,5 | 39 | 18 | 42,5 | 17,5 | 41 |
| **XVR NW 16 HL 3/8** | L | PN 250 | 18 | G 3/8" -19 | M 26 x 1,5 | 22 | 12 | 33,5 | 14,0 | 27 |
| **XVR NW 16 HL** | L | PN 250 | 18 | G 1/2" -14 | M 26 x 1,5 | 26 | 14 | 36,0 | 14,5 | 27 |
| **XVR NW 16 HL 3/4** | L | PN 250 | 18 | G 3/4" -14 | M 26 x 1,5 | 32 | 16 | 38,0 | 14,5 | 32 |
| **XVR NW 16 HL 1** | L | PN 250 | 18 | G 1" -11 | M 26 x 1,5 | 39 | 18 | 40,5 | 15,0 | 41 |
| **XVR NW 20 HL 1/2** | L | PN 160 | 22 | G 1/2" -14 | M 30 x 2 | 26 | 14 | 38,0 | 16,5 | 32 |
| **XVR NW 20 HL** | L | PN 160 | 22 | G 3/4" -14 | M 30 x 2 | 32 | 16 | 40,0 | 16,5 | 32 |
| **XVR NW 20 HL 1** | L | PN 160 | 22 | G 1" -11 | M 30 x 2 | 39 | 18 | 43,0 | 17,5 | 41 |
| **XVR NW 25 HL 1/2** | L | PN 160 | 28 | G 1/2" -14 | M 36 x 2 | 26 | 14 | 40,0 | 18,5 | 41 |
| **XVR NW 25 HL 3/4** | L | PN 160 | 28 | G 3/4" -14 | M 36 x 2 | 32 | 16 | 41,0 | 17,5 | 41 |
| **XVR NW 25 HL** | L | PN 160 | 28 | G 1" -11 | M 36 x 2 | 39 | 18 | 43,0 | 17,5 | 41 |
| **XVR NW 25 HL 1 1/4** | L | PN 160 | 28 | G 1.1/4" -11 | M 36 x 2 | 49 | 20 | 46,0 | 18,3 | 50 |
| **XVR NW 32 HL 3/4** | L | PN 160 | 35 | G 3/4" -14 | M 45 x 2 | 32 | 16 | 45,0 | 18,5 | 46 |
| **XVR NW 32 HL 1** | L | PN 160 | 35 | G 1" -11 | M 45 x 2 | 39 | 18 | 47,0 | 18,5 | 46 |
| **XVR NW 32 HL** | L | PN 160 | 35 | G 1.1/4" -11 | M 45 x 2 | 49 | 20 | 48,0 | 17,5 | 50 |
| **XVR NW 32 HL 1 1/2** | L | PN 160 | 35 | G 1.1/2" -11 | M 45 x 2 | 55 | 22 | 51,0 | 18,5 | 55 |
| **XVR NW 40 HL 1 1/4** | L | PN 160 | 42 | G 1.1/4" -11 | M 52 x 2 | 49 | 20 | 50,0 | 19,0 | 55 |
| **XVR NW 40 HL** | L | PN 160 | 42 | G 1.1/2" -11 | M 52 x 2 | 55 | 22 | 52,0 | 19,0 | 55 |
| | | | | | | | | | | |
| **XVR NW 03 HS 1/8** | S | PN 400 | 6 | G 1/8" -28 | M 14 x 1,5 | 14 | 8 | 27,5 | 12,5 | 14 |
| **XVR NW 03 HS** | S | PN 400 | 6 | G 1/4" -19 | M 14 x 1,5 | 18 | 12 | 32,0 | 13,0 | 19 |

*Navzdory nejpečlivější kontrole nemůžeme vyloučit chyby a nepřejímáme žádnou záruku za obsažené údaje.*

## Výrobek

| Označení | Typová řada | Provozní tlak v barech | Ø d2 (mm) | G1 | G2 | Ø d3 (mm) | i (mm) | L1 (mm) | L2 (mm) | SW (mm) |
|---|---|---|---|---|---|---|---|---|---|---|
| **XVR NW 03 HS 3/8** | S | PN 400 | 6 | G 3/8" -19 | M 14 x 1,5 | 22 | 12 | 32,5 | 13,5 | 22 |
| **XVR NW 03 HS 1/2** | S | PN 400 | 6 | G 1/2" -14 | M 14 x 1,5 | 26 | 14 | 35,0 | 14,0 | 27 |
| **XVR NW 04 HS** | S | PN 400 | 8 | G 1/4" -19 | M 16 x 1,5 | 18 | 12 | 34,0 | 15,0 | 19 |
| **XVR NW 04 HS 3/8** | S | PN 400 | 8 | G 3/8" -19 | M 16 x 1,5 | 22 | 12 | 34,5 | 15,5 | 22 |
| **XVR NW 04 HS 1/2** | S | PN 400 | 8 | G 1/2" -14 | M 16 x 1,5 | 26 | 14 | 37,0 | 16,0 | 27 |
| **XVR NW 06 HS 1/4** | S | PN 400 | 10 | G 1/4" -19 | M 18 x 1,5 | 18 | 12 | 34,0 | 14,5 | 19 |
| **XVR NW 06 HS** | S | PN 400 | 10 | G 3/8" -19 | M 18 x 1,5 | 22 | 12 | 34,5 | 15,0 | 22 |
| **XVR NW 06 HS 1/2** | S | PN 400 | 10 | G 1/2" -14 | M 18 x 1,5 | 26 | 14 | 39,0 | 17,5 | 27 |
| **XVR NW 08 HS 1/4** | S | PN 400 | 12 | G 1/4" -19 | M 20 x 1,5 | 18 | 12 | 36,0 | 16,5 | 22 |
| **XVR NW 08 HS** | S | PN 400 | 12 | G 3/8" -19 | M 20 x 1,5 | 22 | 12 | 36,5 | 17,0 | 22 |
| **XVR NW 08 HS 1/2** | S | PN 400 | 12 | G 1/2" -14 | M 20 x 1,5 | 26 | 14 | 39,0 | 17,5 | 27 |
| **XVR NW 08 HS 3/4** | S | PN 400 | 12 | G 3/4" -14 | M 20 x 1,5 | 32 | 16 | 41,0 | 17,5 | 32 |
| **XVR NW 10 HS 3/8** | S | PN 400 | 14 | G 3/8" -19 | M 22 x 1,5 | 22 | 12 | 38,5 | 18,5 | 27 |
| **XVR NW 10 HS** | S | PN 400 | 14 | G 1/2" -14 | M 22 x 1,5 | 27 | 14 | 41,0 | 19,0 | 27 |
| **XVR NW 10 HS 3/4** | S | PN 400 | 14 | G 3/4" -14 | M 22 x 1,5 | 32 | 16 | 43,0 | 19,0 | 32 |
| **XVR NW 13 HS 1/4** | S | PN 400 | 16 | G 1/4" -19 | M 24 x 1,5 | 22 | 12 | 38,0 | 18,5 | 27 |
| **XVR NW 13 HS 3/8** | S | PN 400 | 16 | G 3/8" -19 | M 24 x 1,5 | 22 | 12 | 39,0 | 18,5 | 27 |
| **XVR NW 13 HS** | S | PN 400 | 16 | G 1/2" -14 | M 24 x 1,5 | 26 | 14 | 41,0 | 18,5 | 27 |
| **XVR NW 13 HS 3/4** | S | PN 400 | 16 | G 3/4" -14 | M 24 x 1,5 | 32 | 16 | 45,0 | 20,5 | 32 |
| **XVR NW 16 HS 1/2** | S | PN 400 | 20 | G 1/2" -14 | M 30 x 2 | 26 | 14 | 45,0 | 20,5 | 32 |
| **XVR NW 16 HS** | S | PN 400 | 20 | G 3/4" -14 | M 30 x 2 | 39 | 18 | 47,0 | 20,5 | 32 |
| **XVR NW 16 HS 1** | S | PN 250 | 20 | G 1" -11 | M 30 x 2 | 39 | 18 | 50,0 | 21,5 | 41 |
| **XVR NW 20 HS 1/2** | S | PN 250 | 25 | G 1/2" -14 | M 36 x 2 | 26 | 14 | 49,0 | 23,0 | 41 |
| **XVR NW 20 HS 3/4** | S | PN 250 | 25 | G 3/4" -14 | M 36 x 2 | 32 | 16 | 51,0 | 23,5 | 41 |
| **XVR NW 20 HS** | S | PN 250 | 25 | G 1" -11 | M 36 x 2 | 39 | 18 | 53,0 | 23,0 | 41 |
| **XVR NW 20 HS 1 1/4** | S | PN 160 | 25 | G 1.1/4" -11 | M 36 x 2 | 49 | 20 | 56,0 | 24,0 | 50 |
| **XVR NW 25 HS 3/4** | S | PN 160 | 30 | G 3/4" -14 | M 42 x 2 | 32 | 16 | 53,0 | 23,5 | 46 |
| **XVR NW 25 HS 1** | S | PN 160 | 30 | G 1" -11 | M 42 x 2 | 39 | 18 | 55,0 | 23,5 | 46 |
| **XVR NW 25 HS** | S | PN 160 | 30 | G 1.1/4" -11 | M 42 x 2 | 49 | 20 | 57,0 | 23,5 | 50 |
| **XVR NW 25 HS 1 1/2** | S | PN 160 | 30 | G 1.1/2" -11 | M 42 x 2 | 55 | 22 | 50,0 | 23,5 | 55 |
| **XVR NW 32 HS 1** | S | PN 160 | 38 | G 1" -11 | M 52 x 2 | 39 | 18 | 60,0 | 26,0 | 55 |
| **XVR NW 32 HS 1 1/4** | S | PN 160 | 38 | G 1.1/4" -11 | M 52 x 2 | 49 | 20 | 62,0 | 26,0 | 55 |
| **XVR NW 32 HS** | S | PN 160 | 38 | G 1.1/2" -11 | M 52 x 2 | 55 | 22 | 64,0 | 26,0 | 55 |

typová řada: LL = velmi lehká L = lehká S = robustní – PN = nominální tlak PB = max. provozní tlak – Ø d2 = vnější průměr trubky

## Varianty produktu

| | |
|---|---|
| **XVR VA** | Šroubení k zašroubování, Ušlechtilá ocel |
| **VR** | Šroubení k zašroubování, Ocel |