K-BKR EINTEILIG VA

Ball valves

HANSA-FLEX

Vlastnosti

Provozní tlak	max. 55 bar (depending on connection size and temperature)
Provozní teplota	Max. 150 °C
Těsnění	PTFE
Ruční páčka	Stainless steel 1.4301

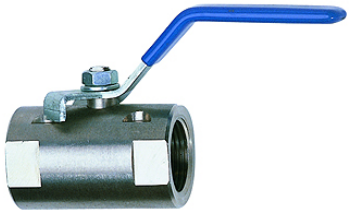

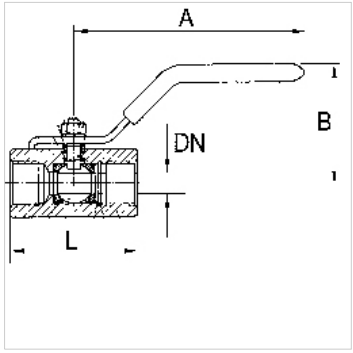

Upozornění

G thread acc. to DIN EN ISO 228-1, with ISO flange plate (acc. to ISO 5211)
Další údaje na dotaz.

Popis

Full bore with G 1/4 to G 3/8, reduced bore with G 1/2 to G 2

Upozornění k objednávkám

For use on devices that have to be vented whenever they are turned off, either because of safety regulations or for technical reasons. The pneumatic devices are disconnected from the system and simultaneously vented each time they are shut off.

Výrobek

Označení	DN	Závit	A (mm)	B (mm)	L (mm)	Materiál
K- 07 30 14 94	5	G 1/4	60,0	30,0	39,8	Stainless steel 1.4401/1.4408
K- 07 30 14 95	7	G 3/8	80,0	33,0	44,8	Stainless steel 1.4401/1.4408
K- 07 30 14 96	9	G 1/2	110,0	57,0	56,5	Stainless steel 1.4401/1.4408
K- 07 30 14 97	13	G 3/4	110,0	61,0	60,0	Stainless steel 1.4401/1.4408
K- 07 30 14 98	15	G 1	124,0	70,0	70,0	Stainless steel 1.4401/1.4408
K- 07 30 14 99	20	G 1 1/4	152,0	75,0	77,6	Stainless steel 1.4401/1.4408
K- 07 30 15 00	25	G 1 1/2	150,0	80,0	87,0	Stainless steel 1.4401/1.4408
K- 07 30 15 01	32	G 2	155,0	85,0	102,0	Stainless steel 1.4401/1.4408

Navzdory nejpečlivější kontrole nemůžeme vyloučit chyby a nepřejímáme žádnou záruku za obsažené údaje.