K-KONSTANT DRUCKREGLER STANDARD 1

Constant-pressure regulators

HANSA FLEX

Vlastnosti

Tlak na vstupu	Max. 25 bar (G 1/4 to G 1/2), Max. 40 bar (G 3/4 to G 1 1/2)
Teplota média	max. 60 °C
Teplota okolí	Max. 90 °C
Těsnicí materiál	Nitrilkaučuk
Pouzdro	Die-cast zinc for (G 1/4 to G 1/2), for Brass (G 3/4 to G 1 1/2)
Měření hodnoty průtoku	At P1 = 8 bar, P2 = 6 bar and pressure drop Δp = 1 bar
Další údaje	User manual on request

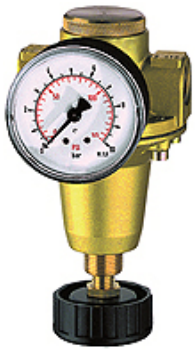

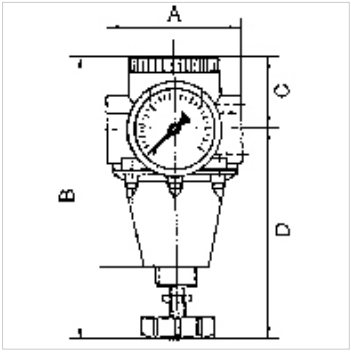

Popis

Reversible diaphragm pressure regulators, independent of inlet pressure, with self-relieving design. The pressure regulators maintain a constant working pressure regardless of variations in the inlet pressure.

Výrobek

Označení	Závit	Regulační rozsah	Průtok (L/min)	A (mm)	B	C (mm)	D (mm)	DN
K- 07 25 03 82	G 1/4	0.5 - 3 bar	3000	77,0	165,0 mm	33,0	132,0	10
K- 07 25 03 83	G 1/4	0.5 - 6 bar	2500	77,0	165,0 mm	33,0	132,0	10
K- 07 25 03 84	G 1/4	0.5 - 10 bar	2000	77,0	165,0 mm	33,0	132,0	10
K- 07 25 03 85	G 1/4	0.5 - 16 bar	1600	77,0	165,0 mm	33,0	132,0	10
K- 07 25 03 86	G 3/8	0.5 - 3 bar	3000	70,0	165,0 mm	33,0	132,0	10
K- 07 25 03 87	G 3/8	0.5 - 6 bar	2500	70,0	165,0 mm	33,0	132,0	10
K- 07 25 03 88	G 3/8	0.5 - 10 bar	2000	70,0	165,0 mm	33,0	132,0	10
K- 07 25 03 89	G 3/8	0.5 - 16 bar	1600	70,0	165,0 mm	33,0	132,0	10
K- 07 25 03 90	G 3/8	0.5 - 3 bar	3500	90,0	170,0 mm	32,0	138,0	15
K- 07 25 03 91	G 3/8	0.5 - 6 bar	3000	90,0	170,0 mm	32,0	138,0	15
K- 07 25 03 92	G 3/8	0.5 - 10 bar	2670	90,0	170,0 mm	32,0	138,0	15
K- 07 25 03 93	G 3/8	0.5 - 16 bar	2000	90,0	170,0 mm	32,0	138,0	15
K- 07 25 03 94	G 1/2	0.5 - 3 bar	3500	82,0	170,0 mm	32,0	138,0	15
K- 07 25 03 95	G 1/2	0.5 - 6 bar	3000	82,0	170,0 mm	32,0	138,0	15
K- 07 25 03 96	G 1/2	0.5 - 10 bar	2670	82,0	170,0 mm	32,0	138,0	15
K- 07 25 03 97	G 1/2	0.5 - 16 bar	2000	82,0	170,0 mm	32,0	138,0	15

Náhradní díly

K-HALTERBAUSATZ STANDARD	Holder
K-VERSCHLEI-SATZ	Set of wearing parts
K-RD NIPPEL KURZ 1	Reducing nipples, short type
K-XV AGM 2	Double nipples, parallel male thread

Navzdory nejpečlivější kontrole nemůžeme vyloučit chyby a nepřejímáme žádnou záruku za obsažené údaje.