K-BKR KL SERIE 375

Ball valves, 375 series

Vlastnosti

Provozní tlak	max. 70 bar (depending on temperature and nominal size)
Orientační hodnoty	G 1/4 to G 1: 20 °C: 70 bar, 60 °C: 65 bar, 100 °C: 45 bar, 150 °C: 7 bar, 180 °C: 4 bar, 200 °C: 0 bar G 1 1/4 to G 1 1/2: 20 °C: 70 bar, 60 °C: 55 bar, 100 °C: 35 bar, 150 °C: 7 bar, 180 °C: 4 bar, 200 °C: 0 bar G 2: 20 °C: 60 bar, 60 °C: 40 bar, 10
Provozní teplota	200 °C at 0 bar
Těsnění	15 % RPTFE (glass fibre reinforced PTFE)
Ruční páčka	Stainless steel 1.4301

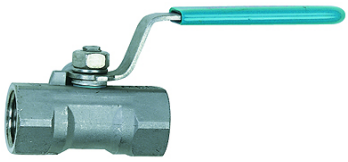

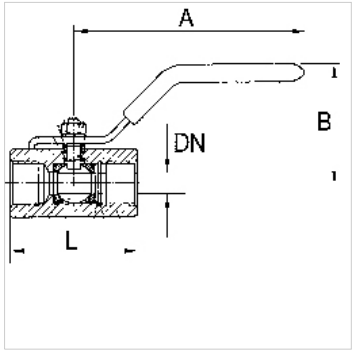

Upozornění

G thread acc. to DIN EN ISO 228-1, with ISO flange plate (acc. to ISO 5211)
Další údaje na dotaz.

Upozornění k objednávkám

For use on devices that have to be vented whenever they are turned off, either because of safety regulations or for technical reasons. The pneumatic devices are disconnected from the system and simultaneously vented each time they are shut off.

Další informace

G thread acc. DIN EN ISO 228-1

Výrobek

Označení	DN	Závit	A (mm)	B (mm)	L (mm)	Materiál
K- 07 30 15 36	5	G 1/4	69,0	34,0	39,0	Stainless steel 1.4401/1.4408
K- 07 30 15 37	7	G 3/8	83,0	38,0	44,0	Stainless steel 1.4401/1.4408
K- 07 30 15 38	10	G 1/2	96,0	41,0	59,0	Stainless steel 1.4401/1.4408
K- 07 30 15 39	13	G 3/4	96,0	45,0	60,0	Stainless steel 1.4401/1.4408
K- 07 30 29 80	16	G 1	116,0	52,0	72,0	Stainless steel 1.4401/1.4408
K- 07 30 29 81	20	G 1 1/4	116,0	57,0	77,0	Stainless steel 1.4401/1.4408
K- 07 30 29 82	25	G 1 1/2	158,0	62,0	84,0	Stainless steel 1.4401/1.4408
K- 07 30 29 83	32	G 2	158,0	68,0	100,0	Stainless steel 1.4401/1.4408

Navzdory nejpečlivější kontrole nemůžeme vyloučit chyby a nepřejímáme žádnou záruku za obsažené údaje.