G HB IR
Aufschraub-Stutzen

Eigenschaften

Anschluss 1	BSP-Außengewinde zylindrisch
Dichtform 1	60° Innenkonus
Anschluss 2	BSP-Innengewinde zylindrisch
Dichtform 2	flachdichtend
Bauart	Aufschraub-Stutzen
Bauform	gerade
Werkstoff	Stahl
Oberfläche	galvanisch beschichtet



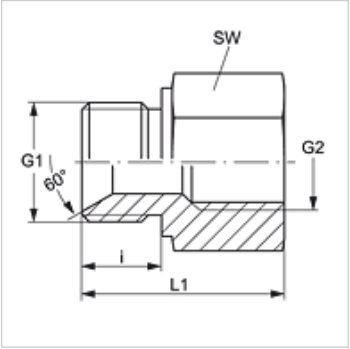

Artikel

Bezeichnung	G1	G2	SW (mm)
G HB 02 IR	G 1/8" -28	G 1/8" -28	17
G HB 02 IR 04	G 1/8" -28	G 1/4" -19	19
G HB 04 IR 02	G 1/4" -19	G 1/8" -28	19
G HB 04 IR	G 1/4" -19	G 1/4" -19	19
G HB 04 IR 06	G 1/4" -19	G 3/8" -19	24
G HB 04 IR 08	G 1/4" -19	G 1/2" -14	27
G HB 06 IR 02	G 3/8" -19	G 1/8" -28	24
G HB 06 IR 04	G 3/8" -19	G 1/4" -19	22
G HB 06 IR	G 3/8" -19	G 3/8" -19	24
G HB 06 IR 08	G 3/8" -19	G 1/2" -14	27
G HB 08 IR 02	G 1/2" -14	G 1/8" -28	27
G HB 08 IR 04	G 1/2" -14	G 1/4" -19	27
G HB 08 IR 06	G 1/2" -14	G 3/8" -19	27
G HB 08 IR	G 1/2" -14	G 1/2" -14	27
G HB 08 IR 12	G 1/2" -14	G 3/4" -14	36
G HB 12 IR 04	G 3/4" -14	G 1/4" -19	32
G HB 12 IR 06	G 3/4" -14	G 3/8" -19	32
G HB 12 IR 08	G 3/4" -14	G 1/2" -14	32
G HB 12 IR	G 3/4" -14	G 3/4" -14	36
G HB 12 IR 16	G 3/4" -14	G 1" -11	41
G HB 16 IR 06	G 1" -11	G 3/8" -19	41
G HB 16 IR 08	G 1" -11	G 1/2" -14	41
G HB 16 IR 12	G 1" -11	G 3/4" -14	41
G HB 16 IR	G 1" -11	G 1" -11	41
G HB 16 IR 20	G 1" -11	G 1.1/4" -11	50
G HB 20 IR 04	G 1.1/4" -11	G 1/4" -19	50
G HB 20 IR 08	G 1.1/4" -11	G 1/2" -14	50
G HB 20 IR 12	G 1.1/4" -11	G 3/4" -14	50
G HB 20 IR 16	G 1.1/4" -11	G 1" -11	41
G HB 20 IR	G 1.1/4" -11	G 1.1/4" -11	50
G HB 20 IR 24	G 1.1/4" -11	G 1.1/2" -11	55
G HB 24 IR 12	G 1.1/2" -11	G 3/4" -14	55
G HB 24 IR 20	G 1.1/2" -11	G 1.1/4" -11	55
G HB 24 IR	G 1.1/2" -11	G 1.1/2" -11	55
G HB 24 IR 16	G 1.1/2" -11	G 1" -11	55
G HB 24 IR 32	G 1.1/2" -11	G 2" -11	70
G HB 32 IR 16	G 2" -11	G 1" -11	70
G HB 32 IR 20	G 2" -11	G 1.1/4" -11	70
G HB 32 IR 24	G 2" -11	G 1.1/2" -11	70
G HB 32 IR	G 2" -11	G 2" -11	70

SW = Schlüsselweite

Produktvarianten

G HB IR VA	Aufschraub-Stutzen, Edelstahl

Trotz sorgfältigster Prüfung können wir Fehler nicht ausschließen und übernehmen keine Gewähr für die enthaltenen Angaben.