# G HBED HJ VA
Verbindungs-Stutzen

## Eigenschaften

| | |
|---|---|
| **Dichtform 1** | 60° Innenkonus + Form E |
| **Anschluss 1** | BSP-Außengewinde zylindrisch |
| **Anschluss 2** | UN/UNF-Außengewinde |
| **Dichtform 2** | 74° Außenkonus |
| **Bauart** | Verbindungs-Stutzen |
| **Bauform** | gerade |
| **Werkstoff** | Edelstahl |



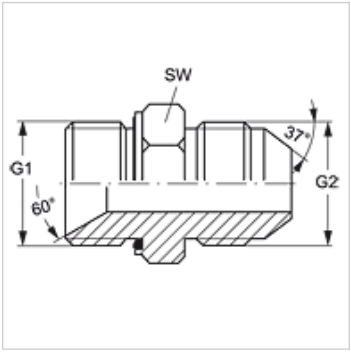


## Bestellhinweise

Dichtungen aus NBR
FPM (Viton) auf Anfrage

## Artikel

| Bezeichnung | G1 | G2 | SW (mm) |
|---|---|---|---|
| **G HBED 02 HJ 04 VA** | G 1/8" -28 | 7/16" -20 UNF | 14 |
| **G HBED 02 HJ 05 VA** | G 1/8" -28 | 1/2" -20 UNF | 14 |
| **G HBED 02 HJ 06 VA** | G 1/8" -28 | 9/16" -18 UNF | 16 |
| **G HBED 04 HJ VA** | G 1/4" -19 | 7/16" -20 UNF | 19 |
| **G HBED 04 HJ 05 VA** | G 1/4" -19 | 1/2" -20 UNF | 19 |
| **G HBED 04 HJ 06 VA** | G 1/4" -19 | 9/16" -18 UNF | 19 |
| **G HBED 04 HJ 08 VA** | G 1/4" -19 | 3/4" -16 UNF | 19 |
| **G HBED 06 HJ 04 VA** | G 3/8" -19 | 7/16" -20 UNF | 22 |
| **G HBED 06 HJ 05 VA** | G 3/8" -19 | 1/2" -20 UNF | 22 |
| **G HBED 06 HJ VA** | G 3/8" -19 | 9/16" -18 UNF | 22 |
| **G HBED 06 HJ 08 VA** | G 3/8" -19 | 3/4" -16 UNF | 22 |
| **G HBED 06 HJ 10 VA** | G 3/8" -19 | 7/8" -14 UNF | 24 |
| **G HBED 08 HJ 04 VA** | G 1/2" -14 | 7/16" -20 UNF | 27 |
| **G HBED 08 HJ 06 VA** | G 1/2" -14 | 9/16" -18 UNF | 30 |
| **G HBED 08 HJ VA** | G 1/2" -14 | 3/4" -16 UNF | 30 |
| **G HBED 08 HJ 10 VA** | G 1/2" -14 | 7/8" -14 UNF | 30 |
| **G HBED 08 HJ 12 VA** | G 1/2" -14 | 1.1/16" -12 UN | 30 |
| **G HBED 12 HJ 08 VA** | G 3/4" -14 | 3/4" -16 UNF | 36 |
| **G HBED 12 HJ 10 VA** | G 3/4" -14 | 7/8" -14 UNF | 36 |
| **G HBED 12 HJ VA** | G 3/4" -14 | 1.1/16" -12 UN | 36 |
| **G HBED 12 HJ 16 VA** | G 3/4" -14 | 1.5/16" -12 UN | 36 |
| **G HBED 16 HJ 10 VA** | G 1" -11 | 7/8" -14 UNF | 41 |
| **G HBED 16 HJ 12 VA** | G 1" -11 | 1.1/16" -12 UN | 41 |
| **G HBED 16 HJ VA** | G 1" -11 | 1.5/16" -12 UN | 41 |
| **G HBED 16 HJ 20 VA** | G 1" -11 | 1.5/8" -12 UN | 46 |
| **G HBED 20 HJ 16 VA** | G 1.1/4" -11 | 1.5/16" -12 UN | 50 |
| **G HBED 20 HJ VA** | G 1.1/4" -11 | 1.5/8" -12 UN | 50 |
| **G HBED 20 HJ 24 VA** | G 1.1/4" -11 | 1.7/8" -12 UN | 50 |
| **G HBED 24 HJ 20 VA** | G 1.1/2" -11 | 1.5/8" -12 UN | 55 |
| **G HBED 24 HJ VA** | G 1.1/2" -11 | 1.7/8" -12 UN | 55 |

SW = Schlüsselweite

## Produktvarianten

| | |
|---|---|
| **G HBED HJ** | Verbindungs-Stutzen, Stahl |

## Ersatzteile

| | |
|---|---|
| **WD V** | Weichdichtung für ED-Verschraubungen |

*Trotz sorgfältigster Prüfung können wir Fehler nicht ausschließen und übernehmen keine Gewähr für die enthaltenen Angaben.*