G HN IN
Verbindungs-Stutzen

HANSA-FLEX

Eigenschaften

Anschluss 1	NPT-Außengewinde
Dichtform 1	gewindedichtend
Anschluss 2	NPT-Innengewinde
Dichtform 2	gewindedichtend
Bauart	Verbindungs-Stutzen
Bauform	gerade
Werkstoff	Stahl
Oberfläche	galvanisch beschichtet



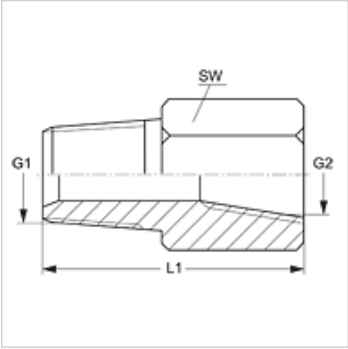

Artikel

Bezeichnung	G1	G2	SW (mm)
G HN 02 IN	1/8" -27 NPT	1/8" -27 NPT	16
G HN 02 IN 04	1/8" -27 NPT	1/4" -18 NPT	19
G HN 02 IN 06	1/8" -27 NPT	3/8" -18 NPT	22
G HN 02 IN 08	1/8" -27 NPT	1/2" -14 NPT	29
G HN 04 IN 02	1/4" -18 NPT	1/8" -27 NPT	19
G HN 04 IN	1/4" -18 NPT	1/4" -18 NPT	19
G HN 04 IN 06	1/4" -18 NPT	3/8" -18 NPT	22
G HN 04 IN 08	1/4" -18 NPT	1/2" -14 NPT	29
G HN 04 IN 12	1/4" -18 NPT	3/4" -14 NPT	35
G HN 06 IN 02	3/8" -18 NPT	1/8" -27 NPT	22
G HN 06 IN 04	3/8" -18 NPT	1/4" -18 NPT	22
G HN 06 IN	3/8" -18 NPT	3/8" -18 NPT	22
G HN 06 IN 08	3/8" -18 NPT	1/2" -14 NPT	29
G HN 08 IN 02	1/2" -14 NPT	1/8" -27 NPT	29
G HN 08 IN 04	1/2" -14 NPT	1/4" -18 NPT	29
G HN 08 IN 06	1/2" -14 NPT	3/8" -18 NPT	29
G HN 08 IN	1/2" -14 NPT	1/2" -14 NPT	27
G HN 08 IN 12	1/2" -14 NPT	3/4" -14 NPT	35
G HN 08 IN 16	1/2" -14 NPT	1" -11,5 NPT	41
G HN 12 IN 04	3/4" -14 NPT	1/4" -18 NPT	35
G HN 12 IN 06	3/4" -14 NPT	3/8" -18 NPT	35
G HN 12 IN 08	3/4" -14 NPT	1/2" -14 NPT	35
G HN 12 IN	3/4" -14 NPT	3/4" -14 NPT	35
G HN 12 IN 16	3/4" -14 NPT	1" -11,5 NPT	41
G HN 12 IN 20	3/4" -14 NPT	1.1/4" -11,5 NPT	50
G HN 16 IN 04	1" -11,5 NPT	1/4" -18 NPT	42
G HN 16 IN 06	1" -11,5 NPT	3/8" -18 NPT	42
G HN 16 IN 08	1" -11,5 NPT	1/2" -14 NPT	42
G HN 16 IN 12	1" -11,5 NPT	3/4" -14 NPT	42
G HN 16 IN 20	1" -11,5 NPT	1.1/4" -11,5 NPT	48
G HN 20 IN 08	1.1/4" -11,5 NPT	1/2" -14 NPT	64
G HN 20 IN 12	1.1/4" -11,5 NPT	3/4" -14 NPT	46
G HN 20 IN 16	1.1/4" -11,5 NPT	1" -11,5 NPT	46
G HN 20 IN 24	1.1/4" -11,5 NPT	1.1/2" -11,5 NPT	64
G HN 24 IN 16	1.1/2" -11,5 NPT	1" -11,5 NPT	64
G HN 24 IN 20	1.1/2" -11,5 NPT	1.1/4" -11,5 NPT	64
G HN 24 IN 12	1.1/2" -11,5 NPT	3/4" -14 NPT	64
G HN 32 IN 16	2" -11,5 NPT	1" -11,5 NPT	64
G HN 32 IN 20	2" -11,5 NPT	1.1/4" -11,5 NPT	64
G HN 32 IN 24	2" -11,5 NPT	1.1/2" -11,5 NPT	64

SW = Schlüsselweite

Produktvarianten

G HN IN VA	Verbindungs-Stutzen, Edelstahl

Trotz sorgfältigster Prüfung können wir Fehler nicht ausschließen und übernehmen keine Gewähr für die enthaltenen Angaben.