ELOMK
Screw-in fitting, L shaped

Properties

Connection 1	metric cylindrical outer thread
Sealing form 1	O-ring and spacer diaphragm ring
Connection 2 + 3	metric cylindrical outer thread
Sealing form 2 + 3	24° inner cone
Design	Adjustable direction screw-in fitting
Construction	L shaped
Scope of supply	Socket with union nut and cutting ring
Material	Steel
Surface	electro galvanised



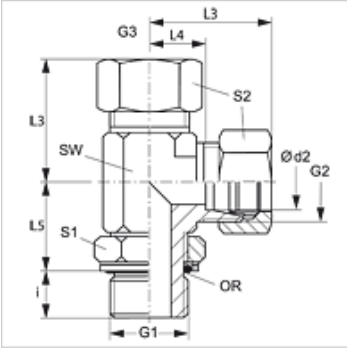

Note

Information about fitting, installation, pressure loads and permissible operating temperatures can be found in the technical information for pipe fittings.

Item

Identification	Series	Operating pressure	Ø d2 (mm)	G1	G2 + G3	i (mm)	L3 (mm)	L4 (mm)	L5 (mm)	AF (mm)	S1	S2	OR
ELOMK NW 04 HL	L	PN 315	6	M 10 x 1	M 12 x 1.5	7	29	14	20	13	14	14	8.1 x 1.6
ELOMK NW 06 HL	L	PN 315	8	M 12 x 1.5	M 14 x 1.5	10	31	16	22	17	14	17	9.3 x 2.4
ELOMK NW 08 HL	L	PN 315	10	M 14 x 1.5	M 16 x 1.5	9	32	17	25	17	19	19	11.3 x 2.4
ELOMK NW 10 HL	L	PN 315	12	M 16 x 1.5	M 18 x 1.5	9	34	19	26	19	19	22	13.3 x 2.4
ELOMK NW 13 HL	L	PN 315	15	M 18 x 1.5	M 22 x 1.5	11	36	21	30	22	22	27	15.3 x 2.4
ELOMK NW 16 HL	L	PN 315	18	M 22 x 1.5	M 26 x 1.5	11	40	24	33	27	27	32	19.3 x 2.4
ELOMK NW 20 HL 27	L	PN 160	22	M 27 x 2	M 30 x 2	14	44	28	35	32	30	36	23.6 x 2.9
ELOMK NW 25 HL	L	PN 160	28	M 33 x 2	M 36 x 2	14	47	31	38	38	36	41	29.5 x 3.0
ELOMK NW 32 HL	L	PN 160	35	M 42 x 2	M 45 x 2	14	59	38	48	50	50	50	38.0 x 2.0
ELOMK NW 40 HL	L	PN 160	42	M 48 x 2	M 52 x 2	16	61	38	49	55	50	60	44.5 x 3.0
ELOMK NW 03 HS	S	PN 400	6	M 12 x 1.5	M 14 x 1.5	10	30	15	22	17	14	17	9.3 x 2.4
ELOMK NW 04 HS	S	PN 400	8	M 14 x 1.5	M 16 x 1.5	10	32	17	26	17	19	19	11.3 x 2.4
ELOMK NW 06 HS	S	PN 400	10	M 16 x 1.5	M 18 x 1.5	11	34	18	27	19	19	22	13.3 x 2.4
ELOMK NW 08 HS	S	PN 400	12	M 18 x 1.5	M 20 x 1.5	12	38	22	31	22	22	24	15.3 x 2.4
ELOMK NW 13 HS	S	PN 400	16	M 22 x 1.5	M 24 x 1.5	14	43	25	35	27	27	30	19.3 x 2.4
ELOMK NW 16 HS	S	PN 400	20	M 27 x 2	M 30 x 2	16	49	28	39	32	30	36	23.6 x 2.9
ELOMK NW 20 HS	S	PN 315	25	M 33 x 2	M 36 x 2	16	54	30	44	38	36	46	29.5 x 3.0
ELOMK NW 25 HS	S	PN 250	30	M 42 x 2	M 42 x 2	17	62	36	51	50	50	50	38.0 x 3.0
ELOMK NW 32 HS	S	PN 200	38	M 48 x 2	M 52 x 2	19	65	34	54	55	50	60	44.5 x 3.0

Series: LL = Very light L = Light S = Heavy – PN = Nominal pressure PB = Max. operating pressure – Ø d2 = External pipe diameter

Product versions

XELOMK Screw-in fitting, L shaped, Socket (without union nut and cutting ring)

Despite careful checking, we cannot guarantee the accuracy of all information included on this site, and we accept no liability.