NEL
Fitting, L shaped

Properties

Connection 1	Pipe socket not pre-assembled
Sealing form 1	Cutting ring connection
Connection 2 + 3	metric cylindrical outer thread
Sealing form 2 + 3	24° inner cone
Design	Adjustable direction fitting
Construction	L shaped
Standard	DIN 2353 ISO 8434-1
Scope of supply	Pipe socket without union nut and cutting ring
Material	Steel
Surface	electro galvanised



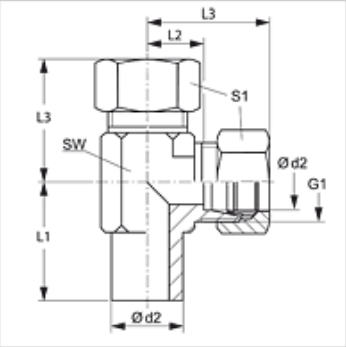

Note

Information about fitting, installation, pressure loads and permissible operating temperatures can be found in the technical information for pipe fittings.

Item

Identification	Series	Operating pressure	Ø d2 (mm)	G1	L1 (mm)	L2 (mm)	L3 (mm)	AF (mm)	S1
NEL NW 04 HL	L	PN 315	6	M 12 x 1.5	26,0	12,0	27	12	14
NEL NW 06 HL	L	PN 315	8	M 14 x 1.5	27,5	14,0	29	12	17
NEL NW 08 HL	L	PN 315	10	M 16 x 1.5	29,0	15,0	30	14	19
NEL NW 10 HL	L	PN 315	12	M 18 x 1.5	29,5	17,0	32	17	22
NEL NW 13 HL	L	PN 315	15	M 22 x 1.5	32,5	21,0	36	19	27
NEL NW 16 HL	L	PN 315	18	M 26 x 1.5	35,5	23,5	40	24	32
NEL NW 20 HL	L	PN 160	22	M 30 x 2	38,5	27,5	44	27	36
NEL NW 25 HL	L	PN 160	28	M 36 x 2	41,5	30,5	47	36	41
NEL NW 32 HL	L	PN 160	35	M 45 x 2	51,0	34,5	56	41	50
NEL NW 40 HL	L	PN 160	42	M 52 x 2	56,0	40,0	63	50	60
NEL NW 03 HS	S	PN 630	6	M 14 x 1.5	29,0	16,0	31	12	17
NEL NW 04 HS	S	PN 630	8	M 16 x 1.5	27,5	17,0	32	14	19
NEL NW 06 HS	S	PN 630	10	M 18 x 1.5	30,0	17,5	34	17	22
NEL NW 08 HS	S	PN 630	12	M 20 x 1.5	31,0	21,5	38	17	24
NEL NW 10 HS	S	PN 630	14	M 22 x 1.5	35,0	22,0	40	19	27
NEL NW 13 HS	S	PN 400	16	M 24 x 1.5	36,5	24,5	43	24	30
NEL NW 16 HS	S	PN 400	20	M 30 x 2	44,5	26,5	48	27	36
NEL NW 20 HS	S	PN 400	25	M 36 x 2	50,0	30,0	54	36	46
NEL NW 25 HS	S	PN 400	30	M 42 x 2	55,0	35,5	62	41	50
NEL NW 32 HS	S	PN 315	38	M 52 x 2	63,0	41,0	72	50	60

Series: LL = Very light L = Light S = Heavy – PN = Nominal pressure PB = Max. operating pressure – Ø d2 = External pipe diameter

Product versions

NEL VA	Fitting, L shaped, Stainless steel
XNEL	Fitting, L shaped, Steel

Additional elements

VOM	Pre-assembly sockets

Despite careful checking, we cannot guarantee the accuracy of all information included on this site, and we accept no liability.