KM
Counter nut for bulkhead fitting

HANSA-FLEX

Properties

Design	Counter nut for bulkhead fittings
Standard	ISO 8434-1
Material	Steel
Surface	electro galvanised



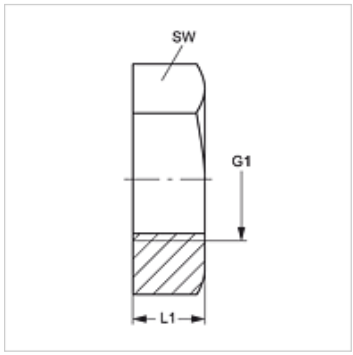

Item

Identification	G1	L1 (mm)	AF (mm)
KM 12	M 12 x 1.5	6	17
KM 14	M 14 x 1.5	6	19
KM 16	M 16 x 1.5	6	22
KM 18	M 18 x 1.5	6	24
KM 20	M 20 x 1.5	6	27
KM 22	M 22 x 1.5	7	30
KM 24	M 24 x 1.5	7	32
KM 26	M 26 x 1.5	8	36
KM 30	M 30 x 2	9	41
KM 36 - 1.5	M 36 x 1.5	9	46
KM 36	M 36 x 2	9	46
KM 42	M 42 x 2	9	50
KM 45	M 45 x 2	9	55
KM 52	M 52 x 2	10	65

Product versions

KM MG	Counter nut for bulkhead fitting, Brass
KM VA	Counter nut for bulkhead fitting, Stainless steel

Spare part for following products

SV	Bulkhead fitting

Despite careful checking, we cannot guarantee the accuracy of all information included on this site, and we accept no liability.