SRDK MG
Double conical ring

HANSA-FLEX

Properties

Design	Double conical ring
Standard	DIN 3862
Application	For union nuts A DIN 3870 and union screws DIN 3871
Material	Brass

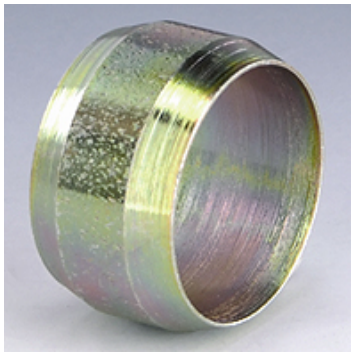

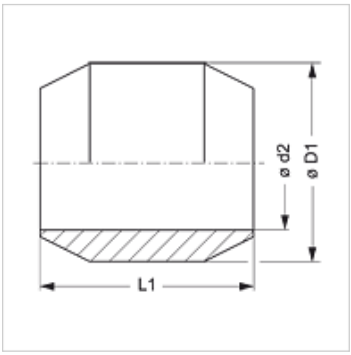

Description

For union nuts A DIN 3870 and union screws DIN 3871.

Item

Identification	Ø D1 (mm)	Ø d2 (mm)	L1 (mm)
SRDK 04 MG	6	4	5,5
SRDK 05 MG	7	5	6,0
SRDK 06 MG	8	6	6,5
SRDK 08 MG	10	8	6,5
SRDK 10 MG	12	10	7,5
SRDK 12 MG	14	12	8,0
SRDK 15 MG	18	15	9,0
SRDK 18 MG	20	18	9,0

Ø d2 = External pipe diameter

Product versions

SRDK	Double conical ring, Steel

Despite careful checking, we cannot guarantee the accuracy of all information included on this site, and we accept no liability.