UEM VA
Union nut, VA

Properties

Connection 1	metric nut thread
Design	Union nut
Standard	DIN 3870
Material	Stainless steel

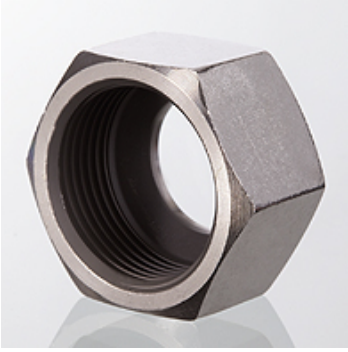

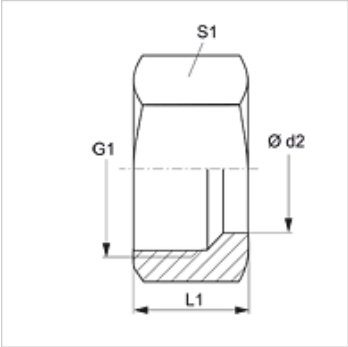

Item

Identification	Series	Ø d2 (mm)	G1	L1 (mm)	S1
UEM 04 LL VA	LL	4	M 8 x 1	11,5	10
UEM 06 LL VA	LL	6	M 10 x 1	12,0	12
UEM 08 LL VA	LL	8	M 12 x 1	12,5	14
UEM NW 04 L VA	L	6	M 12 x 1.5	15,0	14
UEM NW 06 L VA	L	8	M 14 x 1.5	15,0	17
UEM NW 08 L VA	L	10	M 16 x 1.5	16,0	19
UEM NW 10 L VA	L	12	M 18 x 1.5	16,0	22
UEM NW 13 L VA	L	15	M 22 x 1.5	17,5	27
UEM NW 16 L VA	L	18	M 26 x 1.5	18,5	32
UEM NW 20 L VA	L	22	M 30 x 2	20,5	36
UEM NW 25 L VA	L	28	M 36 x 2	21,5	41
UEM NW 32 L VA	L	35	M 45 x 2	24,5	50
UEM NW 40 L VA	L	42	M 52 x 2	24,5	60
UEM NW 03 S VA	S	6	M 14 x 1.5	17,0	17
UEM NW 04 S VA	S	8	M 16 x 1.5	17,0	19
UEM NW 06 S VA	S	10	M 18 x 1.5	18,0	22
UEM NW 08 S VA	S	12	M 20 x 1.5	18,0	24
UEM NW 10 S VA	S	14	M 22 x 1.5	21,0	27
UEM NW 13 S VA	S	16	M 24 x 1.5	21,0	30
UEM NW 16 S VA	S	20	M 30 x 2	24,5	36
UEM NW 20 S VA	S	25	M 36 x 2	27,5	46
UEM NW 25 S VA	S	30	M 42 x 2	29,5	50
UEM NW 32 S VA	S	38	M 52 x 2	33,0	60

Series: LL = Very light L = Light S = Heavy – PN = Nominal pressure PB = Max. operating pressure – Ø d2 = External pipe diameter

Product versions

UEM	Union nut, Steel
UEM MG	Union nut MG, Brass

Despite careful checking, we cannot guarantee the accuracy of all information included on this site, and we accept no liability.