VSH
Reinforcing sleeve for pipes

HANSA-FLEX

Properties

Design	Support bushes
Material	Steel
Surface	electro galvanised



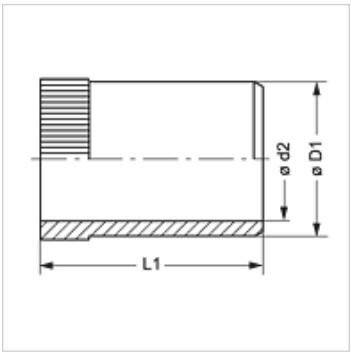

Item

Identification	for internal pipe Ø (mm)	Ø D1 (mm)	Ø d2 (mm)	L1 (mm)
VSH 4 ID	4,0	3,8	2,6	15,5
VSH 04.5 ID	4,5	4,3	3,1	14,0
VSH 5 ID	5,0	4,8	3,6	14,0
VSH 6 ID	6,0	5,8	4,6	15,5
VSH 7 ID	7,0	6,8	5,6	17,0
VSH 8 ID	8,0	7,8	6,6	16,5
VSH 9 ID	9,0	8,8	7,6	16,5
VSH 10 ID	10,0	9,8	8,6	16,5
VSH 12 ID	12,0	11,8	10,2	17,0
VSH 13 ID	13,0	12,8	11,2	17,0
VSH 14 ID	14,0	13,8	12,2	17,0
VSH 15 ID	15,0	14,8	13,2	17,5
VSH 16 ID	16,0	15,8	14,2	17,5
VSH 17 ID	17,0	16,8	15,2	18,0
VSH 18 ID	18,0	17,8	16,2	22,0
VSH 19 ID	19,0	18,8	17,2	18,0
VSH 20 ID	20,0	19,8	18,2	18,0
VSH 21 ID	21,0	20,8	19,2	20,0
VSH 22 ID	22,0	21,8	20,2	23,5
VSH 24 ID	24,0	23,8	22,2	18,0
VSH 25 ID	25,0	24,8	23,2	18,0
VSH 26 ID	26,0	25,8	24,2	21,0
VSH 27 ID	27,0	26,8	25,2	21,0
VSH 30 ID	30,0	29,8	27,2	21,0
VSH 31 ID	31,0	30,8	28,8	22,5
VSH 32 ID	32,0	31,8	29,2	22,5
VSH 33 ID	33,0	32,8	30,2	22,5
VSH 38 ID	38,0	37,8	35,8	23,5

Product versions

VSH MG	Reinforcing sleeve for pipes, Brass
VSH VA	Reinforcing sleeve for pipes, Stainless steel

Despite careful checking, we cannot guarantee the accuracy of all information included on this site, and we accept no liability.