AOVM ED VA
Screw-in fitting

HANSA-FLEX

Properties

Connection 1	metric cylindrical outer thread
Sealing form 1	24° outer cone with O-ring
Connection 2	metric nut thread
Sealing form 2	Shape E
Design	Screw-in fitting
Construction	straight
Standard	DIN 2353 ISO 8434-1
Material	Stainless steel



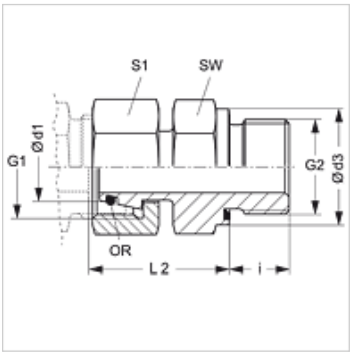

Note

Information about fitting, installation, pressure loads and permissible operating temperatures can be found in the technical information for pipe fittings.

Ordering information

Seals of NBR
FPM (Viton) on request

Item

Identification	Series	Operating pressure	Ø d1 (mm)	G1	G2	Ø d3 (mm)	i (mm)	L2 (mm)	AF (mm)	S1	OR
AOVM NW 04 L ED VA	L	PN 315	6	M 12 x 1.5	M 10 x 1	13,9	8	24,5	14	14	4.0 x 1.5
AOVM NW 06 L ED VA	L	PN 315	8	M 14 x 1.5	M 12 x 1.5	16,9	12	26,5	17	17	6.0 x 1.5
AOVM NW 08 L ED VA	L	PN 315	10	M 16 x 1.5	M 14 x 1.5	18,9	12	27,5	19	19	7.5 x 1.5
AOVM NW 10 L ED VA	L	PN 315	12	M 18 x 1.5	M 16 x 1.5	21,9	12	30,5	22	22	9.0 x 1.5
AOVM NW 13 L ED VA	L	PN 315	15	M 22 x 1.5	M 18 x 1.5	23,9	12	31,5	24	27	12.0 x 2.0
AOVM NW 16 L ED VA	L	PN 315	18	M 26 x 1.5	M 22 x 1.5	26,9	14	31,5	27	32	15.0 x 2.0
AOVM NW 20 L ED VA	L	PN 160	22	M 30 x 2	M 26 x 1.5	31,9	16	32,5	32	36	20.0 x 2.0
AOVM NW 25 L ED VA	L	PN 160	28	M 36 x 2	M 33 x 2	39,9	18	35,0	41	41	26.0 x 2.0
AOVM NW 32 L ED VA	L	PN 160	35	M 45 x 2	M 42 x 2	49,9	20	42,5	50	50	32.0 x 2.5
AOVM NW 40 L ED VA	L	PN 160	42	M 52 x 2	M 48 x 2	54,9	22	46,5	55	60	38.0 x 2.5
AOVM NW 03 S ED VA	S	PN 630	6	M 14 x 1.5	M 12 x 1.5	16,9	12	27,0	17	17	4.0 x 1.5
AOVM NW 04 S ED VA	S	PN 630	8	M 14 x 1.5	M 16 x 1.5	18,9	12	29,5	19	19	6.0 x 1.5
AOVM NW 06 S ED VA	S	PN 630	10	M 18 x 1.5	M 16 x 1.5	21,9	12	32,0	22	22	7.5 x 1.5
AOVM NW 08 S ED VA	S	PN 630	12	M 20 x 1.5	M 18 x 1.5	23,9	12	34,0	24	24	9.0 x 1.5
AOVM NW 10 S ED VA	S	PN 630	14	M 22 x 1.5	M 20 x 1.5	25,9	14	36,5	27	27	10.0 x 2.0
AOVM NW 13 S ED VA	S	PN 400	16	M 24 x 1.5	M 22 x 1.5	26,9	14	37,0	27	30	12.0 x 2.0
AOVM NW 16 S ED VA	S	PN 400	20	M 30 x 2	M 27 x 2	31,9	16	43,0	32	36	16.3 x 2.4
AOVM NW 20 S ED VA	S	PN 400	25	M 36 x 2	M 33 x 2	39,9	18	48,0	41	46	20.3 x 2.4
AOVM NW 25 S ED VA	S	PN 400	30	M 42 x 2	M 42 x 2	49,9	20	51,0	50	50	25.3 x 2.4
AOVM NW 32 S ED VA	S	PN 315	38	M 52 x 2	M 48 x 2	54,9	22	60,0	55	60	33.3 x 2.4

Series: LL = Very light L = Light S = Heavy – PN = Nominal pressure PB = Max. operating pressure – Ø d1 = External pipe diameter

Product versions

AOVM ED	Screw-in fitting, Steel

Spare parts

WD V	Soft seal for ED fittings

Despite careful checking, we cannot guarantee the accuracy of all information included on this site, and we accept no liability.