AOVN
Screw-in fitting

Properties

Connection 1	NPT external threads
Sealing form 1	thread seal
Connection 2	metric nut thread
Sealing form 2	24° outer cone with O-ring
Design	Screw-in fitting
Construction	straight
Standard	DIN 2353 ISO 8434-1
Material	Steel
Surface	electro galvanised



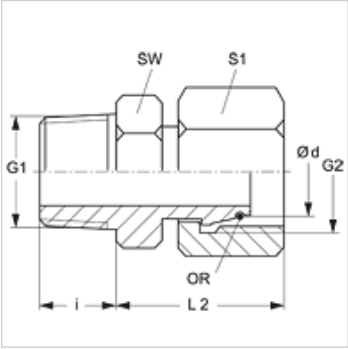

Note

Information about fitting, installation, pressure loads and permissible operating temperatures can be found in the technical information for pipe fittings.

Item

Identification	Series	Operating pressure	Ø d (mm)	G1	G2	i (mm)	L2 (mm)	AF (mm)	S1	OR
AOVN NW 04 L	L	PN 315	6	1/8" -27 NPT	M 12 x 1.5	10,0	31,5	11	14	4.0 x 1.5
AOVN NW 06 L	L	PN 315	8	1/4" -18 NPT	M 14 x 1.5	14,5	37,5	14	17	6.0 x 1.5
AOVN NW 08 L	L	PN 315	10	1/4" -18 NPT	M 16 x 1.5	14,5	38,0	14	19	7.5 x 1.5
AOVN NW 10 L	L	PN 315	12	3/8" -18 NPT	M 18 x 1.5	14,5	40,0	19	22	9.0 x 1.5
AOVN NW 13 L	L	PN 315	15	1/2" -14 NPT	M 22 x 1.5	19,5	49,5	22	27	12.0 x 2.0
AOVN NW 16 L	L	PN 315	18	1/2" -14 NPT	M 26 x 1.5	19,5	49,0	24	32	15.0 x 2.0
AOVN NW 20 L	L	PN 160	22	3/4" -14 NPT	M 30 x 2	19,5	52,0	27	36	20.0 x 2.0
AOVN NW 25 L	L	PN 160	28	1" -11.5 NPT	M 36 x 2	24,5	61,0	36	41	26.0 x 2.0
AOVN NW 32 L	L	PN 160	35	1.1/4" -11.5 NPT	M 45 x 2	25,0	65,5	46	50	32.0 x 2.5
AOVN NW 40 L	L	PN 160	42	1.1/2" -11.5 NPT	M 52 x 2	26,0	68,5	50	60	38.0 x 2.5
AOVN NW 03 S	S	PN 630	6	1/4" -18 NPT	M 14 x 1.5	14,5	37,5	14	17	4.0 x 1.5
AOVN NW 04 S	S	PN 630	8	1/4" -18 NPT	M 16 x 1.5	14,5	38,0	14	19	6.0 x 1.5
AOVN NW 06 S	S	PN 630	10	3/8" -18 NPT	M 18 x 1.5	14,5	40,5	19	22	7.5 x 1.5
AOVN NW 08 S	S	PN 630	12	3/8" -18 NPT	M 20 x 1.5	14,5	42,0	19	24	9.0 x 1.5
AOVN NW 10 S	S	PN 630	14	1/2" -14 NPT	M 22 x 1.5	19,5	50,5	22	27	10.0 x 2.0
AOVN NW 13 S	S	PN 400	16	1/2" -14 NPT	M 24 x 1.5	19,5	51,0	22	30	12.0 x 2.0
AOVN NW 16 S	S	PN 400	20	3/4" -14 NPT	M 30 x 2	19,5	54,0	27	36	16.3 x 2.4
AOVN NW 20 S	S	PN 400	25	1" -11.5 NPT	M 36 x 2	24,5	63,5	36	46	20.3 x 2.4
AOVN NW 25 S	S	PN 400	30	1.1/4" -11.5 NPT	M 42 x 2	25,0	70,5	46	50	25.3 x 2.4
AOVN NW 32 S	S	PN 315	38	1.1/2" -11.5 NPT	M 52 x 2	26,0	73,5	50	60	33.3 x 2.4

Series: LL = Very light L = Light S = Heavy – PN = Nominal pressure PB = Max. operating pressure – Ø d = External pipe diameter

Product versions

AOVN VA	Screw-in fitting, Stainless steel

Despite careful checking, we cannot guarantee the accuracy of all information included on this site, and we accept no liability.