AOVR ED VA
Screw-in fitting

HANSA-FLEX

Properties

Connection 1	metric nut thread
Sealing form 1	24° outer cone with O-ring
Connection 2	BSP cylindrical external threads
Sealing form 2	Shape E
Design	Screw-in fitting
Construction	straight
Standard	DIN 2353 ISO 8434-1
Material	Stainless steel



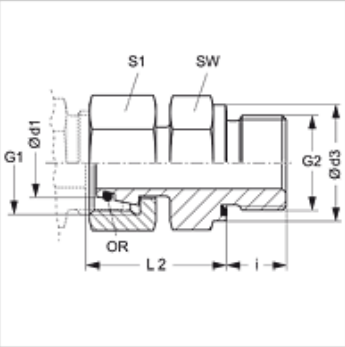

Note

Information about fitting, installation, pressure loads and permissible operating temperatures can be found in the technical information for pipe fittings.

Ordering information

Seals of NBR
FPM (Viton) on request

Item

Identification	Series	Operating pressure	Ø d1 (mm)	G1	G2	Ø d3 (mm)	i (mm)	L2 (mm)	AF (mm)	S1	OR
AOVR NW 04 L ED VA	L	PN 315	6	M 12 x 1.5	G 1/8" -28	13,9	8	24,5	14	14	4.0 x 1.5
AOVR NW 04 L 1/4 ED VA	L	PN 315	6	M 12 x 1.5	G 1/4" -19	18,9	12	27,0	19	14	4.0 x 1.5
AOVR NW 06 L ED VA	L	PN 315	8	M 14 x 1.5	G 1/4" -19	18,9	12	29,5	19	17	6.0 x 1.5
AOVR NW 06 L 3/8 ED VA	L	PN 315	8	M 14 x 1.5	G 3/8" -19	21,9	12	29,5	22	17	6.0 x 1.5
AOVR NW 08 L ED VA	L	PN 315	10	M 16 x 1.5	G 1/4" -19	18,9	12	27,5	19	19	7.5 x 1.5
AOVR NW 08 L 1/2 ED VA	L	PN 315	10	M 16 x 1.5	G 1/2" -14	26,9	14	30,0	27	19	7.5 x 1.5
AOVR NW 08 L 3/8 ED VA	L	PN 315	10	M 16 x 1.5	G 3/8" -19	21,9	12	30,0	22	19	7.5 x 1.5
AOVR NW 10 L ED VA	L	PN 315	12	M 18 x 1.5	G 3/8" -19	21,9	12	34,0	22	22	7.5 x 1.5
AOVR NW 10 L 1/4 ED VA	L	PN 315	12	M 18 x 1.5	G 1/4" -19	19,0	12	27,5	19	22	9.0 x 1.5
AOVR NW 10 L 1/2 ED VA	L	PN 315	12	M 18 x 1.5	G 1/2" -14	26,9	14	32,0	27	27	7.5 x 1.5
AOVR NW 13 L ED VA	L	PN 315	15	M 22 x 1.5	G 1/2" -14	26,9	14	32,0	27	27	12.0 x 2.0
AOVR NW 13 L 3/8 ED VA	L	PN 315	15	M 22 x 1.5	G 3/8" -19	21,9	12	35,0	24	27	12.0 x 2.0
AOVR NW 16 L ED VA	L	PN 315	18	M 26 x 1.5	G 1/2" -14	26,9	14	31,5	27	32	15.0 x 2.0
AOVR NW 16 L 3/4 ED VA	L	PN 315	18	M 26 x 1.5	G 3/4" -14	31,9	16	33,0	32	32	15.0 x 2.0
AOVR NW 20 L ED VA	L	PN 160	22	M 30 x 2	G 3/4" -14	31,9	16	32,0	32	36	20.0 x 2.0
AOVR NW 20 L 1/2 ED VA	L	PN 160	22	M 30 x 2	G 1/2" -14	26,9	14	32,0	27	36	20.0 x 2.0
AOVR NW 20 L 1 ED VA	L	PN 160	22	M 30 x 2	G 1" -11	39,9	18	51,0	41	36	20.0 x 2.0
AOVR NW 25 L ED VA	L	PN 160	28	M 36 x 2	G 1" -11	39,9	18	35,0	41	41	26.0 x 2.0
AOVR NW 25 L 3/4 ED VA	L	PN 160	28	M 36 x 2	G 3/4" -14	31,9	16	35,0	32	41	26.0 x 2.0
AOVR NW 32 L ED VA	L	PN 160	35	M 45 x 2	G 1.1/4" -11	49,9	20	42,5	50	50	32.0 x 2.5
AOVR NW 40 L ED VA	L	PN 160	42	M 52 x 2	G 1.1/2" -11	54,9	22	46,5	55	60	38.0 x 2.5
AOVR NW 03 S ED VA	S	PN 630	6	M 14 x 1.5	G 1/4" -19	18,9	12	27,0	19	17	4.0 x 1.5
AOVR NW 04 S ED VA	S	PN 630	8	M 16 x 1.5	G 1/4" -19	18,9	12	29,5	19	19	6.0 x 1.5
AOVR NW 04 S 3/8 ED VA	S	PN 630	8	M 16 x 1.5	G 3/8" -19	21,9	12	32,0	22	19	6.0 x 1.5
AOVR NW 06 S ED VA	S	PN 630	10	M 18 x 1.5	G 3/8" -19	21,9	12	32,0	22	22	7.5 x 1.5
AOVR NW 06 S 1/2 ED VA	S	PN 630	10	M 18 x 1.5	G 1/2" -14	26,9	14	32,0	27	22	7.5 x 1.5
AOVR NW 08 S ED VA	S	PN 630	12	M 20 x 1.5	G 3/8" -19	21,9	12	34,0	22	24	9.0 x 1.5
AOVR NW 08 S 1/2 ED VA	S	PN 630	12	M 20 x 1.5	G 1/2" -14	27,0	14	35,0	27	24	9.0 x 1.5
AOVR NW 08 S 1/4 ED VA	S	PN 630	12	M 20 x 1.5	G 1/4" -19	18,9	12	42,0	19	24	9.0 x 1.5
AOVR NW 10 S ED VA	S	PN 630	14	M 22 x 1.5	G 1/2" -14	26,9	14	36,5	27	27	10.0 x 2.0
AOVR NW 13 S ED VA	S	PN 400	16	M 24 x 1.5	G 1/2" -14	26,9	14	37,0	27	30	12.0 x 2.0
AOVR NW 13 S 3/4 ED VA	S	PN 400	16	M 24 x 1.5	G 3/4" -14	31,9	16	39,0	32	30	12.0 x 2.0
AOVR NW 13 S 3/8 ED VA	S	PN 400	16	M 24 x 1.5	G 3/8" -19	21,9	12	37,0	24	30	12.0 x 2.0
AOVR NW 16 S ED VA	S	PN 400	20	M 30 x 2	G 3/4" -14	31,9	16	42,5	32	36	16.3 x 2.4
AOVR NW 16 S 1/2 ED VA	S	PN 400	20	M 30 x 2	G 1/2" -14	26,9	14	38,0	27	36	16.3 x 2.4
AOVR NW 16 S 1 ED VA	S	PN 400	20	M 30 x 2	G 1" -11	39,9	18	55,0	41	36	16.3 x 2.4
AOVR NW 20 S ED VA	S	PN 400	25	M 36 x 2	G 1" -11	39,9	18	47,5	41	46	20.3 x 2.4
AOVR NW 20 S 3/4 ED VA	S	PN 400	25	M 36 x 2	G 3/4" -14	31,9	16	58,0	32	46	20.3 x 2.4
AOVR NW 25 S ED VA	S	PN 400	30	M 42 x 2	G 1.1/4" -11	49,9	20	51,0	50	50	25.3 x 2.4

Despite careful checking, we cannot guarantee the accuracy of all information included on this site, and we accept no liability.

AOVR ED VA
Screw-in fitting

Item

Identification	Series	Operating pressure	Ø d1 (mm)	G1	G2	Ø d3 (mm)	i (mm)	L2 (mm)	AF (mm)	S1	OR
AOVR NW 32 S ED VA	S	PN 315	38	M 52 x 2	G 1.1/2" -11	54,9	22	59,5	55	60	33.3 x 2.4

Series: LL = Very light L = Light S = Heavy – PN = Nominal pressure PB = Max. operating pressure – Ø d1 = External pipe diameter

Product versions

AOVR ED	Screw-in fitting, Steel

Spare parts

WD V	Soft seal for ED fittings

Despite careful checking, we cannot guarantee the accuracy of all information included on this site, and we accept no liability.