AVR ED
Screw-in fitting

HANSA-FLEX

Properties

Connection 1	BSP external thread, cylindrical
Sealing form 1	Shape E
Connection 2	metric nut thread
Sealing form 2	Pipe socket with cutting ring
Design	Screw-in fitting
Construction	straight
Standard	DIN 2353 ISO 8434-1
Scope of supply	Pipe socket with union nut and pre-assembled cutting ring
Material	Steel
Surface	electro galvanised



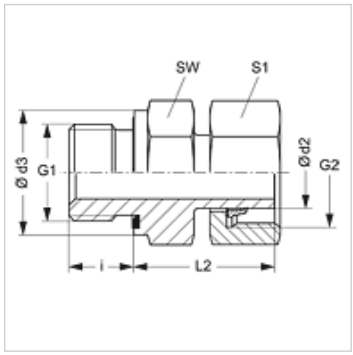

Note

Information about fitting, installation, pressure loads and permissible operating temperatures can be found in the technical information for pipe fittings.

Item

Identification	Series	Operating pressure	Ø d2 (mm)	G1	G2	Ø d3 (mm)	i (mm)	L2 (mm)	AF (mm)	S1
AVR NW 04 L ED	L	PN 315	6	G 1/8" -28	M 12 x 1.5	13,9	8	24,5	14	14
AVR NW 06 L ED	L	PN 315	8	G 1/4" -19	M 14 x 1.5	18,9	12	27,0	19	17
AVR NW 08 L ED	L	PN 315	10	G 1/4" -19	M 16 x 1.5	18,9	12	27,5	19	19
AVR NW 10 L 1/4 ED	L	PN 315	12	G 1/4" -19	M 18 x 1.5	18,9	12	28,5	19	22
AVR NW 10 L ED	L	PN 315	12	G 3/8" -19	M 18 x 1.5	21,9	12	30,0	22	22
AVR NW 10 L 1/2 ED	L	PN 315	12	G 1/2" -14	M 18 x 1.5	26,9	14	30,5	27	22
AVR NW 13 L 3/8 ED	L	PN 315	15	G 3/8" -19	M 22 x 1.5	21,9	12	30,0	22	27
AVR NW 13 L ED	L	PN 315	15	G 1/2" -14	M 22 x 1.5	26,9	14	30,5	27	27
AVR NW 16 L ED	L	PN 315	18	G 1/2" -14	M 26 x 1.5	26,9	14	31,5	27	32
AVR NW 20 L ED	L	PN 160	22	G 3/4" -14	M 30 x 2	31,9	16	32,5	32	36
AVR NW 25 L ED	L	PN 160	28	G 1" -11	M 36 x 2	39,9	18	35,0	41	41
AVR NW 32 L ED	L	PN 160	35	G 1.1/4" -11	M 45 x 2	49,9	20	42,5	50	50
AVR NW 40 L ED	L	PN 160	42	G 1.1/2" -11	M 52 x 2	54,9	22	47,0	55	60
AVR NW 03 S ED	S	PN 630	6	G 1/4" -19	M 14 x 1.5	18,9	12	27,0	19	17
AVR NW 04 S ED	S	PN 630	8	G 1/4" -19	M 16 x 1.5	18,9	12	27,0	19	19
AVR NW 06 S ED	S	PN 630	10	G 3/8" -19	M 18 x 1.5	21,9	12	32,0	22	22
AVR NW 08 S ED	S	PN 630	12	G 3/8" -19	M 20 x 1.5	21,9	12	32,0	22	24
AVR NW 08 S 1/2 ED	S	PN 630	12	G 1/2" -14	M 20 x 1.5	26,9	14	35,0	27	24
AVR NW 10 S ED	S	PN 630	14	G 1/2" -14	M 22 x 1.5	26,9	14	36,5	27	27
AVR NW 13 S ED	S	PN 400	16	G 1/2" -14	M 24 x 1.5	26,9	14	37,0	27	30
AVR NW 16 S ED	S	PN 400	20	G 3/4" -14	M 30 x 2	31,9	16	43,0	32	36
AVR NW 20 S ED	S	PN 400	25	G 1" -11	M 36 x 2	39,9	18	48,0	41	46
AVR NW 25 S ED	S	PN 400	30	G 1.1/4" -11	M 42 x 2	49,9	20	51,0	50	50
AVR NW 32 S ED	S	PN 315	38	G 1.1/2" -11	M 52 x 2	54,9	22	60,0	55	60

Series: LL = Very light L = Light S = Heavy – PN = Nominal pressure PB = Max. operating pressure – Ø d2 = External pipe diameter

Product versions

AVR ED MG	Screw-in fitting, Brass
AVR ED VA	Screw-in fitting, Stainless steel

Spare parts

WD	Soft seal for ED fittings

Despite careful checking, we cannot guarantee the accuracy of all information included on this site, and we accept no liability.