DG HB IR

Rotary fitting, ball bearing

Properties

Connection 1	BSP external thread, cylindrical
Sealing form 1	60° inner cone + shape E
Connection 2	BSP cylindrical internal threads
Sealing form 2	Shape A
Design	Rotary fitting
Construction type	Ball guided
Construction	straight
Temp. min.	-30 °C
Temp. max.	95 °C
Media	Oil
Material	Steel
Surface	electro galvanised



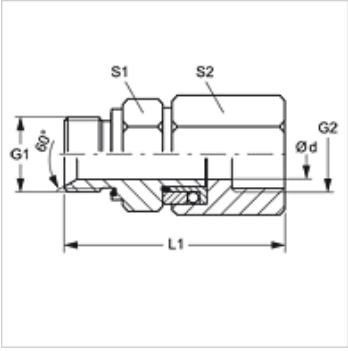

Note

For technical reasons, a minimum working pressure of 10 bar is required.

Item

Identification	Operating pressure	Ø d (mm)	G1 + G2	L1 (mm)	S1	S2
DG HB 10 IR	PN 300	8	G 3/8" -19	89,5	24	24
DG HB 13 IR	PN 300	10	G 1/2" -14	89,5	27	32

Despite careful checking, we cannot guarantee the accuracy of all information included on this site, and we accept no liability.