DTM VA

Banjo fitting, throttle free, T shaped

Properties

Connection 1	metric cylindrical outer thread
Sealing form 1	Edge sealing ring
Connection 2 + 3	metric cylindrical outer thread
Sealing form 2 + 3	24° inner cone
Design	Banjo coupling, throttle free
Construction	T shaped
Standard	DIN 3865
Scope of supply	Socket with union nut and cutting ring
Material	Stainless steel



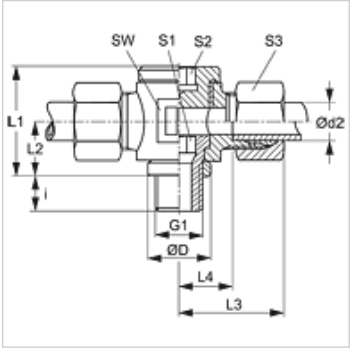

Note

Information about fitting, installation, pressure loads and permissible operating temperatures can be found in the technical information for pipe fittings.

Item

Identification	Series	Operating pressure	Ø d2 (mm)	G1	Ø D (mm)	i (mm)	L1 (mm)	L2 (mm)	L3 (mm)	L4 (mm)	AF (mm)	S1	S2	S3
DTM NW 04 HL VA	L	PN 160	6	M 10 x 1	14	8	24	12	27	12,0	19	6	6	14
DTM NW 06 HL VA	L	PN 160	8	M 12 x 1.5	17	12	27	14	28	13,0	22	6	6	17
DTM NW 08 HL VA	L	PN 100	10	M 14 x 1.5	19	12	30	15	30	15,0	22	8	8	19
DTM NW 10 HL VA	L	PN 100	12	M 16 x 1.5	21	12	36	18	32	17,5	27	10	10	22
DTM NW 13 HL VA	L	PN 100	15	M 18 x 1.5	23	12	39	19	35	20,0	30	12	12	27
DTM NW 16 HL VA	L	PN 100	18	M 22 x 1.5	27	14	41	20	37	20,5	32	14	14	32
DTM NW 20 HL VA	L	PN 100	22	M 26 x 1.5	31	16	46	22	41	24,5	36	17	17	36
DTM NW 25 HL VA	L	PN 100	28	M 33 x 2	39	18	58	29	46	29,5	46	22	22	41
DTM NW 32 HL VA	L	PN 63	35	M 42 x 2	49	20	69	33	55	33,0	55	27	27	50
DTM NW 40 HL VA	L	PN 63	42	M 48 x 2	55	22	84	41	63	40,0	70	32	32	60

Series: LL = Very light L = Light S = Heavy – PN = Nominal pressure PB = Max. operating pressure – Ø d2 = External pipe diameter

Product versions

DTM	Banjo fitting, throttle free, T shaped, Steel
XDTM VA	Banjo fitting, throttle free, T shaped, Stainless steel

Despite careful checking, we cannot guarantee the accuracy of all information included on this site, and we accept no liability.