DTR
Banjo fitting, throttle free, T shaped

Properties

Connection 1	BSP external thread, cylindrical
Sealing form 1	Edge sealing ring
Connection 2 + 3	metric cylindrical outer thread
Sealing form 2 + 3	24° inner cone
Design	Banjo coupling, throttle free
Construction	T shaped
Standard	DIN 3865
Scope of supply	Socket with union nut and cutting ring
Material	Steel
Surface	electro galvanised



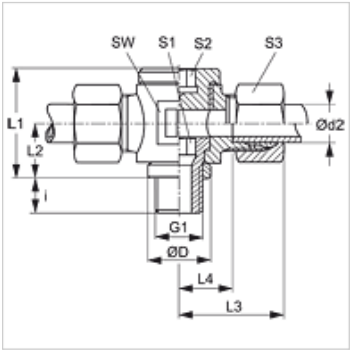

Note

Information about fitting, installation, pressure loads and permissible operating temperatures can be found in the technical information for pipe fittings.

Item

Identification	Series	Operating pressure	Ø d2 (mm)	G1	Ø D (mm)	i (mm)	L1 (mm)	L2 (mm)	L3 (mm)	L4 (mm)	AF (mm)	S1	S2	S3
DTR NW 04 HL	L	PN 160	6	G 1/8" -28	14	8	24	12	27	12,0	19	6	6	14
DTR NW 06 HL	L	PN 160	8	G 1/4" -19	18	12	30	15	29	14,0	22	8	8	17
DTR NW 08 HL	L	PN 100	10	G 1/4" -19	18	12	30	15	30	15,0	22	8	8	19
DTR NW 10 HL	L	PN 100	12	G 3/8" -19	22	12	36	18	32	17,5	27	10	10	22
DTR NW 13 HL	L	PN 100	15	G 1/2" -14	26	14	40	20	35	20,0	30	12	12	27
DTR NW 16 HL	L	PN 100	18	G 1/2" -14	26	14	40	20	36	19,5	30	12	12	32
DTR NW 20 HL	L	PN 100	22	G 3/4" -14	32	16	52	25	43	27,0	41	17	17	36
DTR NW 25 HL	L	PN 100	28	G 1" -11	39	18	58	29	46	29,5	46	22	22	41
DTR NW 32 HL	L	PN 63	35	G 1.1/4" -11	49	20	69	34	55	33,0	55	27	27	50
DTR NW 40 HL	L	PN 63	42	G 1.1/2" -11	55	22	84	41	63	40,0	70	32	32	60
DTR NW 03 HS	S	PN 160	6	G 1/4" -19	18	12	30	15	31	16,0	22	8	8	17
DTR NW 04 HS	S	PN 160	8	G 1/4" -19	18	12	30	15	31	16,0	22	8	8	19
DTR NW 06 HS	S	PN 100	10	G 3/8" -19	22	12	36	18	34	18,0	27	10	10	22
DTR NW 08 HS	S	PN 100	12	G 3/8" -19	22	12	36	18	34	24,0	27	10	10	24
DTR NW 10 HS	S	PN 100	14	G 1/2" -14	26	14	42	21	40	22,0	32	12	12	27
DTR NW 13 HS	S	PN 100	16	G 1/2" -14	26	14	42	21	40	21,5	32	12	12	30
DTR NW 16 HS	S	PN 100	20	G 3/4" -14	32	16	57	28	50	28,5	46	17	17	36
DTR NW 20 HS	S	PN 100	25	G 1" -11	39	18	62	31	56	31,0	50	22	22	46
DTR NW 25 HS	S	PN 63	30	G 1.1/4" -11	49	20	74	36	63	36,5	60	27	27	50
DTR NW 32 HS	S	PN 63	38	G 1.1/2" -11	55	22	84	41	72	41,0	70	32	32	60

Series: LL = Very light L = Light S = Heavy – PN = Nominal pressure PB = Max. operating pressure – Ø d2 = External pipe diameter

Product versions

DTR VA	Banjo fitting, throttle free, T shaped, Stainless steel
XDTR	Banjo fitting, throttle free, T shaped, Steel

Despite careful checking, we cannot guarantee the accuracy of all information included on this site, and we accept no liability.