DTR VA

Banjo fitting, throttle free, T shaped

Properties

Connection 1	BSP external thread, cylindrical
Sealing form 1	Edge sealing ring
Connection 2 + 3	metric cylindrical outer thread
Sealing form 2 + 3	24° inner cone
Design	Banjo coupling, throttle free
Construction	T shaped
Standard	DIN 3865
Scope of supply	Socket with union nut and cutting ring
Material	Stainless steel



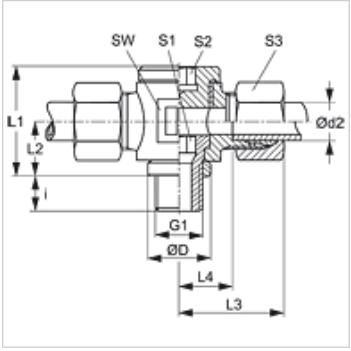

Note

Information about fitting, installation, pressure loads and permissible operating temperatures can be found in the technical information for pipe fittings.

Item

Identification	Series	Operating pressure	Ø d2 (mm)	G1	Ø D (mm)	i (mm)	L1 (mm)	L2 (mm)	L3 (mm)	L4 (mm)	AF (mm)	S1	S2	S3
DTR NW 06 HL VA	L	PN 160	8	G 1/4" -19	18	12	30	15	29	14,0	22	8	8	17
DTR NW 13 HL VA	L	PN 100	15	G 1/2" -14	26	14	40	20	35	20,0	30	12	12	27

Series: LL = Very light L = Light S = Heavy – PN = Nominal pressure PB = Max. operating pressure – Ø d2 = External pipe diameter

Product versions

DTR VA	Banjo fitting, throttle free, T shaped, Stainless steel
XDTR VA	Banjo fitting, throttle free, T shaped, Stainless steel

Despite careful checking, we cannot guarantee the accuracy of all information included on this site, and we accept no liability.