DGR H
Rotary fitting, ball bearing

HANSA-FLEX

Properties

Connection 1	BSP external thread, cylindrical
Sealing form 1	Shape E
Connection 2	metric cylindrical outer thread
Sealing form 2	24° inner cone
Design	Rotary fitting (screw-in connector)
Construction type	Ball bearing
Construction	straight
Scope of supply	Socket (without union nut and cutting ring)
Material	Steel
Surface	electro galvanised



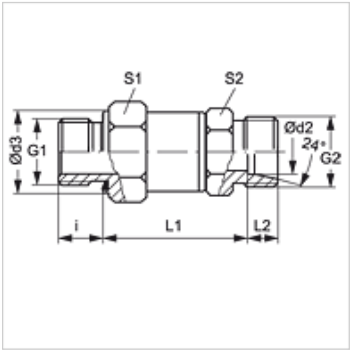

Note

Information about fitting, installation, pressure loads and permissible operating temperatures can be found in the technical information for pipe fittings.

Item

Identification	Series	Operating pressure	Ø d2 (mm)	G1	G2	i (mm)	Ø d3 (mm)	L1 (mm)	L2 (mm)	S1	S2
DGR NW 04 HL	L	PN 315	6	G 1/8" -28	M 12 x 1.5	8	14	40,5	7,0	22	19
DGR NW 04 HL 1/4	L	PN 315	6	G 1/4" -19	M 12 x 1.5	12	19	40,0	7,0	22	19
DGR NW 06 HL	L	PN 315	8	G 1/4" -19	M 14 x 1.5	12	19	40,0	7,0	22	19
DGR NW 08 HL	L	PN 315	10	G 1/4" -19	M 16 x 1.5	12	19	41,0	7,0	22	19
DGR NW 08 HL 3/8	L	PN 315	10	G 3/8" -19	M 16 x 1.5	12	22	50,0	7,0	30	24
DGR NW 10 HL 1/2	L	PN 315	12	G 1/2" -14	M 18 x 1.5	14	27	50,0	7,0	30	24
DGR NW 13 HL	L	PN 315	15	G 1/2" -14	M 22 x 1.5	14	27	51,0	7,0	30	24
DGR NW 13 HL 3/4	L	*1	15	G 3/4" -14	M 22 x 1.5	*1	*1	*1	*1	*1	*1
DGR NW 16 HL	L	PN 315	18	G 1/2" -14	M 26 x 1.5	14	27	51,5	7,5	30	30
DGR NW 16 HL 3/4	L	*1	18	G 3/4" -14	M 26 x 1.5	*1	*1	*1	*1	*1	*1
DGR NW 20 HL 1/2	L	*1	22	G 1/2" -14	M 30 x 2	*1	*1	*1	*1	*1	*1
DGR NW 20 HL	L	PN 160	22	G 3/4" -14	M 30 x 2	16	32	66,0	7,5	41	36
DGR NW 20 HL 1	L	*1	22	G 1" -11	M 30 x 2	*1	*1	*1	*1	*1	*1
DGR NW 03 HS H	S	PN 500	6	G 1/4" -19	M 14 x 1.5	12	19	42,0	7,0	22	19
DGR NW 04 HS H	S	PN 500	8	G 1/4" -19	M 16 x 1.5	12	19	42,0	7,0	22	19
DGR NW 06 HS H	S	PN 500	10	G 3/8" -19	M 18 x 1.5	12	22	42,0	7,5	22	19
DGR NW 08 HS H	S	PN 500	12	G 3/8" -19	M 20 x 1.5	12	22	52,5	7,5	30	24
DGR NW 08 HS 1/2 H	S	PN 500	12	G 1/2" -14	M 20 x 1.5	12	27	53,0	7,5	22	32
DGR NW 10 HS H	S	PN 500	14	G 1/2" -14	M 22 x 1.5	14	27	52,0	8,0	30	24
DGR NW 13 HS H	S	PN 400	16	G 1/2" -14	M 24 x 1.5	14	27	51,5	8,5	30	24
DGR NW 16 HS H	S	PN 400	20	G 3/4" -14	M 30 x 2	16	32	65,5	10,5	41	36
DGR NW 16 HS 1 H	S	PN 400	20	G 1" -11	M 30 x 2	18	40	65,0	10,5	41	36
DGR NW 20 HS 3/4 H	S	PN 400	25	G 3/4" -14	M 36 x 2	16	32	65,0	12,0	41	36
DGR NW 20 HS H	S	PN 400	25	G 1" -11	M 36 x 2	18	40	66,0	12,0	41	36

Series: LL = Very light L = Light S = Heavy – PN = Nominal pressure PB = Max. operating pressure – Ø d2 = External pipe diameter

*1) upon request

Despite careful checking, we cannot guarantee the accuracy of all information included on this site, and we accept no liability.