DGS
Rotary fitting, ball bearing

Properties

Connection 1	metric cylindrical outer thread
Sealing form 1	24° inner cone
Connection 2	metric cylindrical outer thread
Sealing form 2	24° inner cone
Design	Rotary fitting (bulkhead connector)
Construction type	Ball bearing
Construction	straight
Scope of supply	Socket (without union nut and cutting ring)
Material	Steel
Surface	electro galvanised



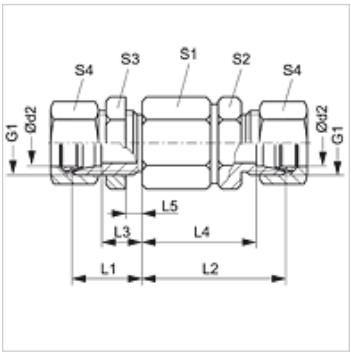

Note

Information about fitting, installation, pressure loads and permissible operating temperatures can be found in the technical information for pipe fittings.

Item

Identification	Series	Operating pressure	Ø d2 (mm)	G1	L1 (mm)	L2 (mm)	L3 (mm)	L4 (mm)	L5 (mm)	S1	S2	S3	S4
DGS NW 03 HS	S	PN 250	6	M 14 x 1.5	23	49	16,0	42,0	5,0	22	17	19	17
DGS NW 04 HS	S	PN 250	8	M 16 x 1.5	23	49	16,0	42,0	5,0	22	17	22	19
DGS NW 08 HS	S	PN 250	12	M 20 x 1.5	23	60	15,5	52,5	5,0	30	24	27	24
DGS NW 13 HS	S	PN 250	16	M 24 x 1.5	26	60	17,5	51,5	5,0	30	27	32	30
DGS NW 16 HS	S	PN 250	20	M 30 x 2	39	76	28,5	65,5	15,0	41	36	41	36
DGS NW 20 HS	S	PN 250	25	M 36 x 2	42	78	30,0	66,0	15,0	41	41	46	46
DGS NW 25 HS	S	PN 250	30	M 42 x 2	44	89	30,5	75,5	15,0	60	46	50	50
DGS NW 32 HS	S	PN 250	38	M 52 x 2	47	92	31,0	76,0	15,0	60	55	65	60

Series: LL = Very light L = Light S = Heavy – PN = Nominal pressure PB = Max. operating pressure – Ø d2 = External pipe diameter

Despite careful checking, we cannot guarantee the accuracy of all information included on this site, and we accept no liability.