NET VA
Fitting, T shaped

Properties

Connection 1	Pipe socket not pre-assembled
Sealing form 1	Cutting ring connection
Connection 2 + 3	metric cylindrical outer thread
Sealing form 2 + 3	24° inner cone
Design	Adjustable direction fitting
Construction	T shaped
Standard	DIN 2353 ISO 8434-1
Scope of supply	Pipe socket without union nut and cutting ring
Material	Stainless steel



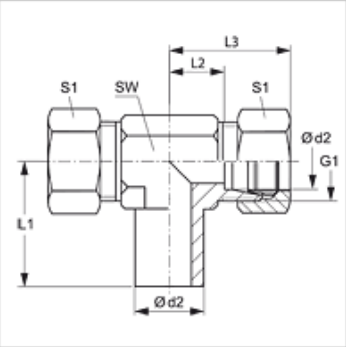

Note

Information about fitting, installation, pressure loads and permissible operating temperatures can be found in the technical information for pipe fittings.

Item

Identification	Series	Operating pressure	Ø d2 (mm)	G1	L1 (mm)	L2 (mm)	L3 (mm)	AF (mm)	S1
NET NW 04 HL VA	L	PN 315	6	M 12 x 1.5	26,0	12,0	27	12	14
NET NW 06 HL VA	L	PN 315	8	M 14 x 1.5	27,5	14,0	29	12	17
NET NW 08 HL VA	L	PN 315	10	M 16 x 1.5	29,0	15,0	30	14	19
NET NW 10 HL VA	L	PN 315	12	M 18 x 1.5	29,5	17,0	32	17	22
NET NW 13 HL VA	L	PN 315	15	M 22 x 1.5	32,5	21,0	36	19	27
NET NW 16 HL VA	L	PN 315	18	M 26 x 1.5	35,5	23,5	40	24	32
NET NW 20 HL VA	L	PN 160	22	M 30 x 2	38,5	27,5	44	27	36
NET NW 25 HL VA	L	PN 160	28	M 36 x 2	41,5	30,5	47	36	41
NET NW 32 HL VA	L	PN 160	35	M 45 x 2	51,0	34,5	56	41	50
NET NW 40 HL VA	L	PN 160	42	M 52 x 2	56,0	40,0	63	50	60
NET NW 03 HS VA	S	PN 630	6	M 14 x 1.5	27,0	16,0	31	12	17
NET NW 04 HS VA	S	PN 630	8	M 16 x 1.5	27,5	17,0	32	14	19
NET NW 06 HS VA	S	PN 630	10	M 18 x 1.5	30,0	17,5	34	17	22
NET NW 08 HS VA	S	PN 630	12	M 20 x 1.5	31,0	21,5	38	17	24
NET NW 10 HS VA	S	PN 630	14	M 22 x 1.5	35,0	22,0	40	19	27
NET NW 13 HS VA	S	PN 400	16	M 24 x 1.5	36,5	24,5	43	24	30
NET NW 16 HS VA	S	PN 400	20	M 30 x 2	44,5	26,5	48	27	36
NET NW 20 HS VA	S	PN 400	25	M 36 x 2	50,0	30,0	54	36	46
NET NW 25 HS VA	S	PN 400	30	M 42 x 2	55,0	35,5	62	41	50
NET NW 32 HS VA	S	PN 315	38	M 52 x 2	63,0	41,0	72	50	60

Series: LL = Very light L = Light S = Heavy – PN = Nominal pressure PB = Max. operating pressure – Ø d2 = External pipe diameter

Product versions

NET	Fitting, T shaped, Steel
XNET VA	Fitting, T shaped, Stainless steel

Additional elements

VOM	Pre-assembly sockets

Despite careful checking, we cannot guarantee the accuracy of all information included on this site, and we accept no liability.