GAN VA
Screw-on fitting

HANSA FLEX

Properties

Connection 1	NPT internal thread
Sealing form 1	thread seal
Connection 2	metric cylindrical outer thread
Sealing form 2	24° inner cone
Design	Screw-on fitting
Construction	straight
Scope of supply	Socket with union nut and cutting ring
Material	Stainless steel

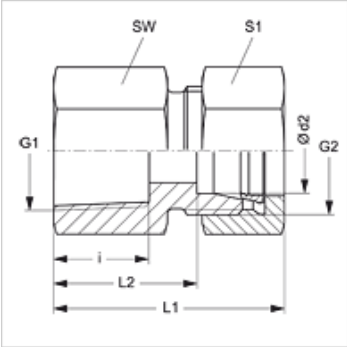

Note

Information about fitting, installation, pressure loads and permissible operating temperatures can be found in the technical information for pipe fittings.

Item

Identification	Series	Operating pressure	Ø d2 (mm)	G1	G2	i (mm)	L1 (mm)	L2 (mm)	AF (mm)	S1
GAN NW 04 HL VA	L	PN 315	6	1/8" -27 NPT	M 12 x 1.5	11,6	34,0	19,0	14	14
GAN NW 04 HL 1/4 VA	L	PN 315	6	1/4" -18 NPT	M 12 x 1.5	16,4	38,0	23,5	19	14
GAN NW 06 HL VA	L	PN 315	8	1/4" -18 NPT	M 14 x 1.5	16,4	38,0	23,5	19	17
GAN NW 08 HL VA	L	PN 315	10	1/4" -18 NPT	M 16 x 1.5	16,4	39,0	24,0	19	19
GAN NW 08 HL 1/2 VA	L	PN 315	10	1/2" -14 NPT	M 16 x 1.5	22,6	38,0	26,0	27	19
GAN NW 10 HL 1/4 VA	L	PN 315	12	1/4" -18 NPT	M 18 x 1.5	16,4	43,0	23,5	19	19
GAN NW 10 HL VA	L	PN 315	12	3/8" -18 NPT	M 18 x 1.5	17,4	42,0	27,0	24	22
GAN NW 10 HL 1/2 VA	L	PN 315	12	1/2" -14 NPT	M 18 x 1.5	22,6	47,0	32,0	27	22
GAN NW 13 HL VA	L	PN 315	15	1/2" -14 NPT	M 22 x 1.5	22,6	48,0	33,0	27	27
GAN NW 16 HL VA	L	PN 315	18	1/2" -14 NPT	M 26 x 1.5	22,6	49,0	32,5	27	32
GAN NW 20 HL VA	L	PN 160	22	3/4" -14 NPT	M 30 x 2	23,1	52,0	35,5	36	36
GAN NW 25 HL VA	L	PN 160	28	1" -11.5 NPT	M 36 x 2	27,8	57,0	40,5	41	41
GAN NW 32 HL VA	L	PN 160	35	1.1/4" -11.5 NPT	M 45 x 2	28,3	62,0	40,5	55	50
GAN NW 40 HL VA	L	PN 160	42	1.1/2" -11.5 NPT	M 52 x 2	28,3	65,0	42,0	60	60
GAN NW 03 HS VA	S	PN 630	6	1/4" -18 NPT	M 14 x 1.5	16,4	41,0	26,0	19	17
GAN NW 04 HS VA	S	PN 630	8	1/4" -18 NPT	M 16 x 1.5	16,4	41,0	26,0	19	19
GAN NW 06 HS VA	S	PN 630	10	3/8" -18 NPT	M 18 x 1.5	17,4	44,0	27,0	24	22
GAN NW 08 HS VA	S	PN 630	12	3/8" -18 NPT	M 20 x 1.5	17,4	44,0	27,5	24	24
GAN NW 08 HS 1/2 VA	S	PN 630	12	1/2" -14 NPT	M 20 x 1.5	22,6	50,0	33,5	27	24
GAN NW 10 HS VA	S	PN 630	14	1/2" -14 NPT	M 22 x 1.5	22,6	53,0	35,0	27	27
GAN NW 13 HS VA	S	PN 400	16	1/2" -14 NPT	M 24 x 1.5	22,6	50,0	34,5	27	30
GAN NW 16 HS VA	S	PN 400	20	3/4" -14 NPT	M 30 x 2	23,1	57,0	35,5	32	36
GAN NW 20 HS VA	S	PN 400	25	1" -11.5 NPT	M 36 x 2	27,8	65,0	41,0	41	46
GAN NW 25 HS VA	S	PN 400	30	1.1/4" -11.5 NPT	M 42 x 2	28,3	70,0	43,5	55	50
GAN NW 32 HS VA	S	PN 315	38	1.1/2" -11.5 NPT	M 52 x 2	28,3	74,0	43,0	60	60

Series: LL = Very light L = Light S = Heavy – PN = Nominal pressure PB = Max. operating pressure – Ø d2 = External pipe diameter

Product versions

XGAN VA	Screw-on fitting, Socket (without union nut and cutting ring)

Despite careful checking, we cannot guarantee the accuracy of all information included on this site, and we accept no liability.