TMK VA
Screw-in fitting, T shaped

Properties

Connection 1	metric conical outer thread
Sealing form 1	thread seal
Connection 2 + 3	metric cylindrical outer thread
Sealing form 2 + 3	24° inner cone
Design	Screw-in fitting
Construction	T shaped
Standard	DIN 2353 ISO 8434-1
Scope of supply	Socket with union nut and cutting ring
Material	Stainless steel



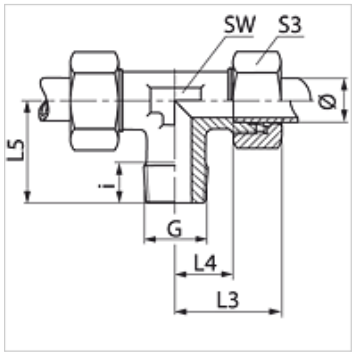

Note

Information about fitting, installation, pressure loads and permissible operating temperatures can be found in the technical information for pipe fittings.

Item

Identification	Series	Operating pressure	External pipe Ø (mm)	G	i (mm)	L3 (mm)	L4 (mm)	L5 (mm)	AF (mm)	S3
TM 04 LL 6 VA	LL	PN 100	4	M 6 x 1 K	8	21	11,0	17	9	10
TM 04 LL VA	LL	PN 100	4	M 8 x 1 K	8	21	11,0	17	9	10
TM 06 LL 6 VA	LL	PN 100	6	M 6 x 1 K	8	21	9,5	17	9	12
TM 06 LL 8 VA	LL	PN 100	6	M 8 x 1 K	8	21	9,5	17	9	12
TM 06 LL VA	LL	PN 100	6	M 10 x 1 K	8	21	9,5	17	9	12
TM 08 LL VA	LL	PN 100	8	M 10 x 1 K	8	23	11,5	20	12	14
TM NW 04 HL VA	L	PN 315	6	M 10 x 1 K	8	27	12,0	20	12	14
TM NW 06 HL VA	L	PN 315	8	M 12 x 1.5 K	12	29	14,0	26	12	17
TM NW 08 HL VA	L	PN 315	10	M 14 x 1.5 K	12	30	15,0	27	14	19
TM NW 10 HL VA	L	PN 315	12	M 16 x 1.5 K	12	32	17,0	28	17	22
TM NW 13 HL VA	L	PN 315	15	M 18 x 1.5 K	12	36	21,0	32	19	27
TM NW 16 HL VA	L	PN 315	18	M 22 x 1.5 K	14	40	23,5	36	24	32
TM NW 03 HS VA	S	PN 400	6	M 12 x 1.5 K	12	31	16,0	26	12	17
TM NW 04 HS VA	S	PN 400	8	M 14 x 1.5 K	12	32	17,0	27	14	19
TM NW 06 HS VA	S	PN 400	10	M 16 x 1.5 K	12	34	17,5	28	17	22
TM NW 08 HS VA	S	PN 400	12	M 18 x 1.5 K	12	38	21,5	28	19	24
TM NW 10 HS VA	S	PN 400	14	M 20 x 1.5 K	14	40	22,0	32	19	27
TM NW 13 HS VA	S	PN 400	16	M 22 x 1.5 K	14	43	24,5	32	24	30

Ø = External pipe diameter – PN = Nominal pressure PB = Max. operating pressure – Series: LL = Very light L = Light S = Heavy

Product versions

TMK	Screw-in fitting, T shaped, Steel
XTMK VA	Screw-in fitting, T shaped, Stainless steel

Despite careful checking, we cannot guarantee the accuracy of all information included on this site, and we accept no liability.