NVM ED
Screw-in sockets

Properties

Connection 1	metric cylindrical outer thread
Sealing form 1	Shape E
Connection 2	Pipe socket not pre-assembled
Sealing form 2	Cutting ring connection
Design	Screw-in sockets
Construction	straight
Standard	DIN 2353 ISO 8434-1
Scope of supply	Socket (without union nut and cutting ring)
Material	Steel
Surface	electro galvanised



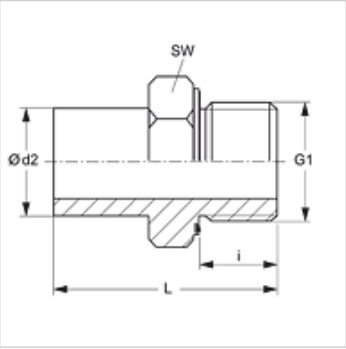

Note

Information about fitting, installation, pressure loads and permissible operating temperatures can be found in the technical information for pipe fittings.

Item

Identification	Series	Operating pressure	Ø d2 (mm)	G1	i (mm)	L (mm)	AF (mm)
NVM NW 04 L ED	L	PN 315	6	M 10 x 1	8	32,5	14
NVM NW 06 L ED	L	PN 315	8	M 12 x 1.5	12	38,5	17
NVM NW 08 L ED	L	PN 315	10	M 16 x 1.5	12	39,5	19
NVM NW 10 L ED	L	PN 315	12	M 16 x 1.5	12	42,5	22
NVM NW 13 L ED	L	PN 315	15	M 18 x 1.5	12	43,5	24
NVM NW 16 L ED	L	PN 315	18	M 22 x 1.5	14	45,5	27
NVM NW 20 L ED	L	PN 160	22	M 26 x 1.5	16	48,5	32
NVM NW 25 L ED	L	PN 160	28	M 33 x 2	18	53,0	41
NVM NW 32 L ED	L	PN 160	35	M 42 x 2	20	62,5	50
NVM NW 40 L ED	L	PN 160	42	M 48 x 2	22	68,5	55
NVM NW 03 S ED	S	PN 630	6	M 12 x 1.5	12	39,0	17
NVM NW 04 S ED	S	PN 630	8	M 14 x 1.5	12	41,5	19
NVM NW 06 S ED	S	PN 630	10	M 16 x 1.5	12	44,0	22
NVM NW 08 S ED	S	PN 630	12	M 18 x 1.5	12	46,0	24
NVM NW 10 S ED	S	PN 630	14	M 20 x 1.5	14	50,5	27
NVM NW 13 S ED	S	PN 400	16	M 22 x 1.5	14	51,0	27
NVM NW 16 S ED	S	PN 400	20	M 27 x 2	16	59,0	32
NVM NW 20 S ED	S	PN 400	25	M 33 x 2	18	66,0	41
NVM NW 25 S ED	S	PN 400	30	M 42 x 2	20	71,0	50
NVM NW 32 S ED	S	PN 315	38	M 48 x 2	22	82,0	55

Series: LL = Very light L = Light S = Heavy – PN = Nominal pressure PB = Max. operating pressure – Ø d2 = External pipe diameter

Product versions

NVM ED VA	Screw-in sockets, Stainless steel

Spare parts

WD	Soft seal for ED fittings

Additional elements

VOM	Pre-assembly sockets

Despite careful checking, we cannot guarantee the accuracy of all information included on this site, and we accept no liability.