TN
Screw-in fitting, T shaped

Properties

Connection 1	NPT external threads
Sealing form 1	thread seal
Connection 2 + 3	metric cylindrical outer thread
Sealing form 2 + 3	24° inner cone
Design	Screw-in fitting
Construction	T shaped
Standard	DIN 3865
Scope of supply	Socket with union nut and cutting ring
Material	Steel
Surface	electro galvanised



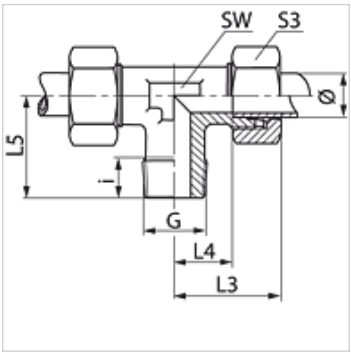

Note

Information about fitting, installation, pressure loads and permissible operating temperatures can be found in the technical information for pipe fittings.

Item

Identification	Series	Operating pressure	External pipe Ø (mm)	G	i (mm)	L3 (mm)	L4 (mm)	L5 (mm)	AF (mm)	S3
TN 04 LL	LL	PN 100	4	1/8" -27 NPT	8	21	11,0	17	9	10
TN 05 LL	LL	PN 100	5	1/8" -27 NPT	8	21	9,5	17	9	12
TN 06 LL	LL	PN 100	6	1/8" -27 NPT	8	21	9,5	17	9	12
TN 08 LL	LL	PN 100	8	1/8" -27 NPT	8	23	11,5	20	12	14
TN NW 04 HL	L	PN 315	6	1/8" -27 NPT	8	27	12,0	20	12	14
TN NW 04 HL 1/4	L	PN 315	6	1/4" -18 NPT	10	27	12,0	20	12	14
TN NW 06 HL	L	PN 315	8	1/4" -18 NPT	12	29	14,0	26	12	17
TN NW 08 HL	L	PN 315	10	1/4" -18 NPT	12	30	15,0	27	14	19
TN NW 10 HL	L	PN 315	12	3/8" -18 NPT	12	32	17,0	28	17	22
TN NW 13 HL	L	PN 315	15	1/2" -14 NPT	14	36	21,0	34	19	27
TN NW 16 HL	L	PN 315	18	1/2" -14 NPT	14	40	23,5	36	24	32
TN NW 20 HL	L	PN 160	22	3/4" -14 NPT	16	44	27,5	42	27	36
TN NW 25 HL	L	PN 160	28	1" -11.5 NPT	16	47	30,5	48	36	41
TN NW 32 HL	L	PN 160	35	1.1/4" -11.5 NPT	20	56	34,5	54	41	50
TN NW 40 HL	L	PN 160	42	1.1/2" -11.5 NPT	22	63	40,0	61	50	60
TN NW 03 HS	S	PN 630	6	1/4" -18 NPT	12	31	16,0	26	12	17
TN NW 04 HS	S	PN 630	8	1/4" -18 NPT	12	32	17,0	27	14	19
TN NW 06 HS	S	PN 630	10	3/8" -18 NPT	12	34	17,5	28	17	22
TN NW 08 HS	S	PN 630	12	3/8" -18 NPT	12	38	21,5	28	17	24
TN NW 10 HS	S	PN 630	14	1/2" -14 NPT	14	40	22,0	32	19	27
TN NW 13 HS	S	PN 400	16	1/2" -14 NPT	14	43	24,5	32	24	30
TN NW 16 HS	S	PN 400	20	3/4" -14 NPT	16	48	26,5	42	27	36
TN NW 20 HS	S	PN 400	25	1" -11.5 NPT	18	54	30,0	48	36	46
TN NW 25 HS	S	PN 400	30	1.1/4" -11.5 NPT	20	62	35,5	54	41	50
TN NW 32 HS	S	PN 315	38	1.1/2" -11.5 NPT	22	72	41,0	61	50	60

Series: LL = Very light L = Light S = Heavy – PN = Nominal pressure PB = Max. operating pressure – Ø = External pipe diameter

Product versions

TN VA	Screw-in fitting, T shaped, Stainless steel
XTN	Screw-in fitting, T shaped, Steel

Despite careful checking, we cannot guarantee the accuracy of all information included on this site, and we accept no liability.