NVN
Screw-in sockets

HANSA-FLEX

Properties

Connection 1	NPT external threads
Sealing form 1	thread seal
Connection 2	Pipe socket not pre-assembled
Sealing form 2	Cutting ring connection
Design	Screw-in sockets
Construction	straight
Standard	DIN 2353 ISO 8434-1
Scope of supply	Socket (without union nut and cutting ring)
Material	Steel
Surface	electro galvanised



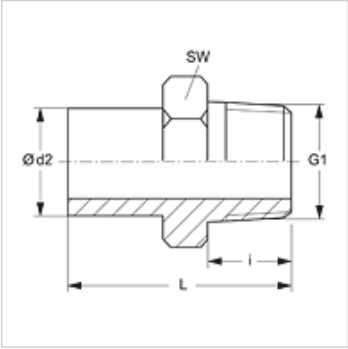

Note

Information about fitting, installation, pressure loads and permissible operating temperatures can be found in the technical information for pipe fittings.

Item

Identification	Series	Operating pressure	Ø d2 (mm)	G1	i (mm)	L (mm)	AF (mm)
NVN NW 04 L	L	PN 315	6	1/8" -27 NPT	10,0	33,0	11
NVN NW 06 L	L	PN 315	8	1/4" -18 NPT	15,0	39,0	14
NVN NW 08 L	L	PN 315	10	1/4" -18 NPT	15,0	40,0	14
NVN NW 10 L	L	PN 315	12	3/8" -18 NPT	15,0	44,5	19
NVN NW 13 L	L	PN 315	15	1/2" -14 NPT	20,0	48,0	22
NVN NW 16 L	L	PN 315	18	1/2" -14 NPT	20,0	49,0	22
NVN NW 20 L	L	PN 160	22	3/4" -14 NPT	20,0	49,0	27
NVN NW 25 L	L	PN 160	28	1" -11.5 NPT	25,0	55,5	36
NVN NW 32 L	L	PN 160	35	1.1/4" -11.5 NPT	26,0	63,0	46
NVN NW 40 L	L	PN 160	42	1.1/2" -11.5 NPT	26,0	65,0	50
NVN NW 03 S	S	PN 630	6	1/4" -18 NPT	15,0	40,0	14
NVN NW 04 S	S	PN 630	8	1/4" -18 NPT	15,0	40,0	14
NVN NW 06 S	S	PN 630	10	3/8" -18 NPT	15,0	44,0	19
NVN NW 08 S	S	PN 630	12	3/8" -18 NPT	15,0	44,5	19
NVN NW 10 S	S	PN 630	14	1/2" -14 NPT	20,0	53,5	22
NVN NW 13 S	S	PN 400	16	1/2" -14 NPT	20,0	53,5	22
NVN NW 16 S	S	PN 400	20	3/4" -14 NPT	20,0	58,0	27
NVN NW 20 S	S	PN 400	25	1" -11.5 NPT	25,0	68,5	36
NVN NW 25 S	S	PN 400	30	1.1/4" -11.5 NPT	26,0	73,5	46
NVN NW 32 S	S	PN 315	38	1.1/2" -11.5 NPT	26,0	78,0	50

Series: LL = Very light L = Light S = Heavy – PN = Nominal pressure PB = Max. operating pressure – Ø d2 = External pipe diameter

Product versions

NVN VA	Screw-in sockets, Stainless steel

Additional elements

VOM	Pre-assembly sockets

Despite careful checking, we cannot guarantee the accuracy of all information included on this site, and we accept no liability.