TR VA
Screw-in fitting, T shaped

Properties

Connection 1	BSP external thread, cylindrical
Sealing form 1	Shape B
Connection 2 + 3	metric cylindrical outer thread
Sealing form 2 + 3	24° inner cone
Design	Screw-in fitting
Construction	T shaped
Standard	DIN 2353 ISO 8434-1
Scope of supply	Socket with union nut and cutting ring
Material	Stainless steel



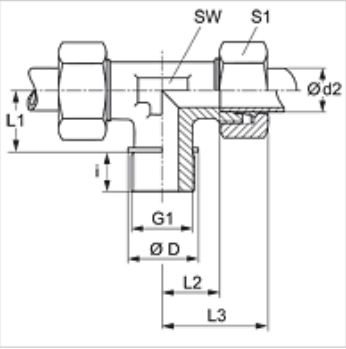

Note

Information about fitting, installation, pressure loads and permissible operating temperatures can be found in the technical information for pipe fittings.

Item

Identification	Series	Operating pressure	Ø d2 (mm)	G1	Ø D (mm)	i (mm)	L1 (mm)	L2 (mm)	L3 (mm)	AF (mm)	S1
TR NW 20 HL VA	L	PN 160	22	G 3/4" -14	32	16	26	27,5	44	27	36
TR NW 25 HL VA	L	PN 160	28	G 1" -11	39	18	30	30,5	47	36	41
TR NW 32 HL VA	L	PN 160	35	G 1.1/4" -11	49	20	34	34,5	56	41	50
TR NW 40 HL VA	L	PN 160	42	G 1.1/2" -11	55	22	39	40,0	63	50	60
TR NW 16 HS VA	S	PN 400	20	G 3/4" -14	32	16	26	26,5	48	27	36
TR NW 20 HS VA	S	PN 250	25	G 1" -11	39	18	30	30,0	54	36	46
TR NW 25 HS VA	S	PN 160	30	G 1.1/4" -11	49	20	34	35,5	62	41	50
TR NW 32 HS VA	S	PN 160	38	G 1.1/2" -11	55	22	39	41,0	72	50	60

Series: LL = Very light L = Light S = Heavy – PN = Nominal pressure PB = Max. operating pressure – Ø d2 = External pipe diameter

Product versions

TR	Screw-in fitting, T shaped, Steel
TR VA	Screw-in fitting, T shaped, Stainless steel

Despite careful checking, we cannot guarantee the accuracy of all information included on this site, and we accept no liability.